Williamson Valley Road Traffic Study

FINAL REPORT

January 2017

Prepared For:

Yavapai County
Public Works Department
1100 Commerce Drive
Prescott, Arizona 86305

Prepared By:

Lee Engineering, LLC
3610 N. 44th Street, Suite 100
Phoenix, Arizona 85018

TABLE OF CONTENTS

INTRODUCTION....1
DATA COLLECTION AND FIELD REVIEW....1
GROWTH RATE CALCULATIONS....4
TRIP GENERATION....5
SIGHT DISTANCE ANALYSIS....6
SIGNAL WARRANT ANALYSIS....9
CAPACITY ANALYSIS....11
TURN LANE ANALYSIS....14
CRASH ANALYSIS....15
DESIGN ALTERNATIVES....21
IMPROVEMENT PRIORITIZATION....35

LIST OF APPENDICES

APPENDIX A – RAW TRAFFIC VOLUME COUNTS....41
APPENDIX B – PEAK HOUR VOLUME MAPS: 2016, 2025, 2040....78
APPENDIX C – AASHTO INTERSECTION SIGHT DISTANCE CRITERIA....95
APPENDIX D – SIGHT DISTANCE CONCERNS AND LOCATIONS....98
APPENDIX E – MUTCD TRAFFIC SIGNAL WARRANT CRITERIA....103
APPENDIX F – ADOT TURN LANE WARRANT CRITERIA....115
APPENDIX G – TURN LANE ANALYSIS RESULTS....124
APPENDIX H –DIAGRAMS OF IMPROVEMENT ALTERNATIVES....127
APPENDIX H.1 – ALTERNATIVE A: BUENA VISTA AND LONGVIEW DRIVE REALIGNMENT....128
APPENDIX H.2 – ALTERNATIVE B: BUENA VISTA TRAIL AND LONGVIEW DRIVE TWLTL....130
APPENDIX H.3 – ALTERNATIVE C: CLIFF ROSE ROAD AND PEMBERTON DRIVE....132
APPENDIX H.4 – ALTERNATIVE D: MCINTOSH DRIVE TO MERRILL DRIVE....134
APPENDIX H.5 – ALTERNATIVE E: KELLY DRIVE, STRINGFIELD DRIVE, AND ONEAL ROAD....136
APPENDIX H.6 – ALTERNATIVE F: SILVER JUNIPER RANCH ROAD, LARIAT LANE, LEVIE LANE....138
APPENDIX H.7 – ALTERNATIVE G: RAINMAKER/SINGLE TREE STREET....140
APPENDIX H.8 – ALTERNATIVE H: GRANITE PARK DRIVE....142
APPENDIX H.9 – ALTERNATIVE I: GLENSHANDRA DRIVE....144
APPENDIX H.10 – ALTERNATIVE J: GRANITE OAKS DRIVE (TRAILHEAD)....146

APPENDIX H.11 – ALTERNATIVE K: BARD RANCH ROAD 148
APPENDIX H.12 – ALTERNATIVE L: BUCHANAN DRIVE 150
APPENDIX H.13 – ALTERNATIVE M: BLACKJACK RIDGE ROAD 152
APPENDIX H.14 – ALTERNATIVE N: AMERICAN RANCH ROAD 154
APPENDIX H.15 – ALTERNATIVE O: OUTER LOOP ROAD, UNSIGNALIZED 156
APPENDIX H.16 – ALTERNATIVE P: OUTER LOOP ROAD, SIGNALIZED 158
APPENDIX H.17 – ALTERNATIVE Q: OUTER LOOP ROAD, SINGLE-LANE ROUNDABOUT 160
APPENDIX H.18 – ALTERNATIVE R: SHARPS ROAD 162
APPENDIX H.19 – ALTERNATIVE S: STAZENSKI ROAD/WILLIAMSON VALLEY RANCH ROAD 164
APPENDIX H.20 – ALTERNATIVE T: CIELO GRANDE AND DOME ROAD 166
APPENDIX I – PRELIMINARY COST ESTIMATES 168

Registered Professional Engineer (Civil)
CERTIFICATE NO.
18477
MICHAEL J.
CYNECKI
Date Signed 2-1-17
ARIZONA, U. S. A.

EXPIRES 6-30-17

LIST OF TABLES

TABLE 1: TURNING MOVEMENT COUNT LOCATIONS....3
TABLE 2: SUMMARY OF PAST DOCUMENTS REVIEWED....3
TABLE 3: CURRENT AND PROJECTED TRAFFIC VOLUMES IN 2025 AND 2040 FROM THE CYMPO TRAFFIC MODELS..4
TABLE 4: PROJECTED TRAFFIC VOLUMES, PERCENT INCREASE IN 2025 AND 2040....4
TABLE 5: COMPARISON OF PEAK-HOUR TRIP GENERATION RATES, FIELD COLLECTED DATA V. ITE AVG. RATES....5
TABLE 6: INTERSECTION SIGHT DISTANCE ANALYSIS RESULTS....6
TABLE 7: SIGNAL WARRANT ANALYSIS, 2016 EXISTING VOLUMES....10
TABLE 8: SIGNAL WARRANT ANALYSIS, 2025 PROJECTED VOLUMES....10
TABLE 9: SIGNAL WARRANT ANALYSIS, 2040 PROJECTED VOLUMES....11
TABLE 10: CORRIDOR LEVEL OF SERVICE SUMMARY....12
TABLE 11: INTERSECTION MOVEMENT LEVEL OF SERVICE SUMMARY....13
TABLE 12: MINOR-STREET TRAFFIC MOVEMENTS WITH THE GREATEST DELAY....13
TABLE 13: LIST OF TURNING MOVEMENTS WITH THE POTENTIAL FOR FUTURE TURN LANE IMPROVEMENTS BASED ON VOLUME CRITERIA....14
TABLE 14: EXISTING TURN LANE STORAGE LENGTH ADEQUACY....15
TABLE 15: LIST OF CRASHES THAT MAY HAVE BEEN PREVENTED WITH A LEFT- OR RIGHT-TURN LANE....19
TABLE 16: PRIORITIZATION MATRIX....37

LIST OF FIGURES

FIGURE 1: SIGHT VISIBILITY OF WILLIAMSON VALLEY ROAD, LOOKING NORTH FROM GRANITE PARK DRIVE....7
FIGURE 2: SIGHT VISIBILITY OF WILLIAMSON VALLEY ROAD, LOOKING SOUTH FROM DOME ROAD....7
FIGURE 3: SIGHT DISTANCE AT OUTER LOOP ROAD, LOOKING SOUTH ONTO WILLIAMSON VALLEY ROAD....8
FIGURE 4: 2011-2015 CRASH MAP BY MANNER OF COLLISION, ALL CRASHES....16
FIGURE 5: CRASH STATISTICS BY YEAR, WEEKDAY, AND TIME OF DAY....17
FIGURE 6: CRASH STATISTICS BY INJURY SEVERITY, LIGHT CONDITION, AND MANNER OF COLLISION....18
FIGURE 7: WILDLIFE CRASH STATISTICS....19
FIGURE 8: 2011-2015 CRASH MAP BY MANNER OF COLLISION, WILDLIFE-RELATED CRASHES REMOVED....20

INTRODUCTION

Yavapai County selected Lee Engineering to conduct a traffic study on Williamson Valley Road from Pioneer Parkway to Nancy Drive, a corridor of 11 miles in length. The purpose of this study is to assess existing conditions, estimate future growth and 2025 and 2040 corridor traffic conditions based on "full build-out" along the corridor, and identify the potential for spot improvements that may consist of intersection realignment, access control, and other safety and operational improvements. This traffic study will prioritize near-term and long-term recommendations for improvements which provide the greatest safety and mobility benefits and/or cost savings to implement.

This traffic study included the following engineering analyses:

- Trip Generation Potential
- Turn Lane Warrant Analysis and Analysis of Adequacy for Existing Turn Lanes
- Signal Warrant Analysis
- Sight Distance Analysis
- Capacity Analysis
- Crash Analysis

The objective of these analyses is to determine whether safety, access, or mobility issues exist or have the potential to exist along the corridor during the two identified planning horizons. The study will also develop design alternatives for potential safety improvements along Williamson Valley Road which will be determined based on the results of the engineering analyses and consideration of public and stakeholder input. This study is intended to provide Yavapai County with a prioritization approach to evaluate the safety benefits and costs of each alternative.

DATA COLLECTION AND FIELD REVIEW

A kick-off meeting and an initial field review was held on May 11, 2016. During the initial field review, the team stopped at several key locations along the Williamson Valley Road corridor to visually identify some of the issues and insight from County staff. The project team collected preliminary data from the County and obtained input/concerns on various items which included right-of-way (ROW), alignment, grade, sight distance, turn lane issues, traffic volume and other observations. Ninety-five percent plans were developed by Kimley-Horn and Associates, Inc. in 2009 for a road widening project along Williamson Valley Road. The plans would have provided improvements to a four-lane section with 16-foot wide raised median and right/left turn lanes where needed up to Outer Loop Road. The plans were never finalized because there is not support among the community nor funding available to implement that project. Instead, there is support to make spot improvements along the corridor to address safety and congestion issues that currently exist or are projected to occur within the study horizon.

Williamson Valley Road is currently a two-lane road with turn lanes at only a few select intersections along the corridor. Most of the intersections along the corridor are T-intersections, and some of them are closely spaced, at times resulting in interlocking left-turn conditions. Some of the turn lanes at intersections along the corridor are shorter than desirable and were evaluated as a part of the study.

The posted speed limit along the corridor is 50 mph (with a 45 mph speed limit approaching Pioneer Parkway). The only traffic signal is at the south end of the study corridor at Pioneer Parkway, where Williamson Valley Road is a four-lane median-divided cross section with dual southbound left-turn lanes and a northbound right-turn bypass lane. The land along Williamson Valley Road immediately north of Pioneer Parkway is State-owned property and development/access between Pioneer Parkway and Buena Vista Trail is unlikely at this time. The study team was informed that the majority of ROW needed for the planned widening project, from Pioneer Parkway to Glenshandra Drive has been obtained by the County. Updated ROW conditions for the entire corridor should be properly represented on the County Assessors website. North of American Ranch Road, 150 feet of ROW exists along the corridor.

The initial field review noted the corridor consists of tangent sections and some curvilinear segments with generally rolling terrain. There are some segments that are prone to flooding, and there are at least three school bus stops along the corridor as well as a trailhead access point. Bicyclist SHARE THE ROAD signs are posted periodically along the corridor. The study team was asked to preserve the segments of existing service/frontage road, but was encouraged to explore opportunities to align some of the cross streets along the corridor as a part of the study. Williamson Valley Road was striped with edge lines, but the paved shoulder along the corridor is minimal. Yavapai County typically utilizes ADOT guidelines and procedures and/or AASHTO for design related elements (turn lane warrants, turn lane design, etc.), and directed the study team to base future improvements on a 55 mph design speed (10 mph over the posted speed limit). The original corridor design speed was found to be 50 mph.

Traffic turning movement counts were collected for 39 roadway intersections along Williamson Valley Road. The 39 intersections were designated for either a 24-hour period, 12-hour period, or a peak-period data collection effort that included turning movements on all approaches, based on past volume data, residential access issues and the potential for growth. At locations selected for 12-hour data collection, the traffic data was collected between 6:00 AM and 6:00 PM. At locations with peak-hour only data collection, data was collected from 6:00 AM to 9:00 AM and from 3:30 PM to 6:30 PM. The intersections included in the turning movement volume count data collection effort are listed in Table 1.

Table 1: Turning Movement Count Locations

Turning Movement Counts - Traffic Volume Data Collection				
Peak Hour Count Locations*			12 HR Count Locations**	24 HR Count Locations
Buena Vista Trail	Mendiburo Way	Buchanan Drive	Longview Drive	Pioneer Parkway
Ridge Drive	Single Tree Street	Scarlett Drive	American Ranch Road	Cliff Rose Road
Merrill Drive	Rainmaker	Chipmunk Road	Stazenski Road	Pemberton Drive
McIntosh Drive	Love Lane	Black Jack Ridge Rd	Almosta Ranch Road	Bridle Path Road
Kelly Drive	Shane Drive	Sharps Road		Glenshandra Drive
Stringfield Drive	Granite Park Dr	Cielo Grande		Outer Loop Road
Oneal Road	Granite Vista Rd	Marlow Road		Nancy Drive (east)
Lariat Lane	Granite Oaks Dr	Whispering Canyon		Nancy Drive (west)
Levie Lane	Bard Ranch Road	Inscription Canyon		

**Note: Peak hour count locations recorded volumes and turning movements from 6:00 - 9:00 AM and 3:30 - 6:30 PM*
**Note: 12 HR count locations recorded volumes and turning movements from 6:00 AM - 6:00 PM*

Traffic counts were collected from May 17 to 19, 2016 while school was in session. The traffic volume data collected for this study is provided in **Appendix A**. Minor adjustments were performed on the collected mainline traffic volume data for Williamson Valley Road to ensure near equilibrium conditions between adjacent intersections for modeling purposes. No adjustments were made to the side street turning movements. However, for the 2016 Synchro analysis a vehicle was added to a turn movement where the actual volume was zero. The 2025 and 2040 traffic volumes as well as the 2025 and 2040 Synchro analysis assumed a vehicle count of 1 for these movements. The adjusted traffic volume data is provided in **Appendix B**.

Crash data along the Williamson Valley Road corridor was obtained from ADOT, the Yavapai County Sheriff's Office, and Yavapai County Public Works, for 2011 to 2015 (five years). Hard copy crash reports were obtained to assess additional crash information where available. Yavapai County provided additional roadway and traffic data, which was incorporated into this analysis. In addition, the CYMPO TransCAD models and the CYMPO Regional Transportation Plan (RTP) Update 2040 were utilized to assess future growth rate projections.

Table 2 lists the prior studies which were reviewed as part of the data collection and assessment process.

Table 2: Summary of Past Documents Reviewed

Document	Prepared By	Year
Williamson Valley Road Corridor Study	Boyle Engineering (Acquired by AECOM)	1996
Signal Warrant Analysis - Williamson Valley Road	Kimley-Horn and Associates	2007
Traffic Report - Williamson Valley Road Improvements	Kimley-Horn and Associates	2008
Williamson Valley Road Reconstruction Plans	Kimley-Horn and Associates	2009
Williamson Valley Road 95% Cross Section Plans	Kimley-Horn and Associates	2009
Sight Distance Study - Williamson Valley Road	Kimley-Horn and Associates	2009

GROWTH RATE CALCULATIONS

The traffic growth projections were based off of past volume data provided by Yavapai County and the projections from the 2025 and 2040 CYMPO Traffic Models. The current volume data collected as a part of this study and traffic volume projections from the CYMPO models are provided in Table 3 and Table 4.

Table 3: Current and Projected Traffic Volumes in 2025 and 2040 from the CYMPO Traffic Models

	Daily Volume	2010 CYMPO RTP	2025 CYMPO RTP	2040 CYMPO RTP
WVR Road Segment	**2016 Data**	**No-Build**	**No-Build**	**No-Build**
N of Pioneer Pkwy	10,076	9,700	12,100	14,200
N of Cliff Rose/Pemberton	-	9,300	11,700	13,800
N of Glenshandra	7,020	7,400	9,200	10,800
N of Bard Ranch	-	4,400	6,900	7,900
N of Outer Loop	4,332	4,400	5,900	6,600
N of Almosta/W 2 South	-	4,100	4,400	4,600

Table 4: Projected Traffic Volumes, Percent Increase in 2025 and 2040

	Volume Increase 2010 to 2025 NB		Volume Increase 2016 to 2025 NB		Volume Increase 2025 NB to 2040 NB	
WVR Road Segment	**Total**	**Per Year**	**Total**	**Per Year**	**Total**	**Per Year**
N of Pioneer Pkwy	24.7%	1.48%	20.1%	2.05%	17.4%	1.07%
N of Cliff Rose/Pemberton	25.8%	1.54%			17.9%	1.11%
N of Glenshandra	24.3%	1.46%	31.1%	3.05%	17.4%	1.07%
N of Bard Ranch	56.8%	3.04%			14.5%	0.91%
N of Outer Loop	34.1%	1.97%	36.2%	3.49%	11.9%	0.75%

The CYMPO Regional Transportation Plan (RTP) Update 2040 provided a population growth increase estimate of 74 percent between the 2010 base year and the 2040 projection. This equates to a linear growth rate of 2.47 percent per year. Based on guidance from County staff, a compound growth rate was desired to estimate future volumes in this study. The compound growth rate was developed using the relationship between the existing 2016 traffic volumes (which were collected as a part of this study) with the 2040 volume projections from the CYMPO RTP 2040. The growth rate projected for the study area is a compound annual growth rate of 2 percent for the future 2025 and 2040 projections, which would represent a conservative background growth estimate. The annual compound growth rate of 2% per year equates to a total growth of 60.84% between 2016 and 2040. In comparison to the CYMPO RTP model, if this total growth over the 24 years were to be represented linearly, it would be 2.54 percent per year.

The 2 percent compounded growth rate was applied to the northbound and southbound traffic volumes on Williamson Valley Road. Future traffic levels on the side street approaches, which primarily provide access to residential parcels, were maintained unless vacant parcels accessible from the side streets were identified. Future increases to the minor street volumes were projected using the existing proportion of turning vehicles between Williamson Valley Road and the adjacent side streets assuming all vacant parcels were to be developed based on existing zoning as single-family homes. The projected traffic volumes for the corridor in 2025 and 2040 are provided in **Appendix B**.

TRIP GENERATION

The purpose of conducting a trip generation analysis was to determine the existing trips generated along Williamson Valley Road and to evaluate the trip potential at full build-out. Land uses within the study area along Williamson Valley Road are primarily single family home residential parcels. This includes the land accessible to the side streets, which feed into residential neighborhoods. The Yavapai County Assessor parcel map was used to determine the total number of residential parcels that can be accessed using Williamson Valley Road or an adjacent side street. In this count, it was also determined which parcels contained built homes or property and which parcels were unbuilt and considered vacant. For the purpose of the analysis, all parcels with built homes or property were considered to be occupied dwelling units. Parcel information provided in the 2008 Kimley-Horn and Associates traffic report was used to validate the information collected from the Yavapai County parcel maps.

It was determined that there are approximately 2,329 existing dwelling units and 3,538 total lots accessible to Williamson Valley Road within the study area. This is a potential increase of 1,209 dwelling units, or a 52% increase at full build-out. There is also future trip generation potential in large areas owned by the Bureau of Land Management (BLM) and areas eligible for Planning Assistance for Rural Areas (PARA) grants that were not considered in this analysis.

To estimate the current trip generating conditions of the study area, all of the vehicle turn movements into and out of the 39 side streets intersections (2,329 dwelling units) during the AM and PM peak hours were summarized, resulting a total of 866 AM and 805 PM peak-hour trips (inbound plus outbound) being generated.

The existing dwelling units generate approximately 49% of the AM peak hour estimated weekday trip ends when compared to the ITE Trip Generation average rate (0.37 trips/unit compared to 0.75 trips/unit) and 34% of the PM peak hour average trip rate (0.34 trips/unit compared to 1.00 trips/unit). Daily trip rates were not calculated. Table 5 shows the captured AM and PM peak hour trip generation rates for the Williamson Valley Road study area as compared to average rate values found in the ITE Trip Generation Manual for a number of different residential land uses. Noting the significantly lower field-collected values as compared to the ITE trip generation data, it was determined future residential development would generate traffic based on existing trip generation characteristics for the community and not the ITE rates. Thus, trip generation rates for future development was based on existing travel patterns and trip rates.

Table 5: Comparison of Peak-Hour Trip Generation Rates, Field Collected Data v. ITE Avg. Rates

			AM Peak			PM Peak		
Land Use	ITE Code	Daily	Rate	Entering	Exiting	Rate	Entering	Exiting
Existing Study Area Conditions	---	---	*0.37*	*0.31*	*0.69*	*0.34*	*0.57*	*0.43*
Single Family Detached Housing	210	9.52	0.75	0.25	0.75	1	0.63	0.37
Apartment	220	6.65	0.51	0.2	0.8	0.62	0.65	0.35
Residential Condominium/Townhouse	230	5.81	0.44	0.17	0.83	0.52	0.67	0.33
Mobile Home Park	240	4.99	0.44	0.2	0.8	0.59	0.62	0.38
Senior Adult Housing - Detached	251	3.68	0.22	0.35	0.65	0.27	0.61	0.39
Recreational Homes	260	3.16	0.16	0.67	0.33	0.26	0.41	0.59
Residential Planned Unit Development	270	7.5	0.51	0.22	0.78	0.62	0.65	0.35

SIGHT DISTANCE ANALYSIS

The AASHTO Policy on Geometric Design for Streets and Highways (6th Edition) was used as the basis in this analysis for intersection sight distance (ISD) standards and criteria. The objective of this analysis is to determine if adequate sight distance exists and to identify the potential need for future improvements. The required intersection sight distance is determined based on the following factors: design speed, roadway grade, time gap, and roadway configuration. For sight distance from the side street, the driver's eye position is assumed to be located 14.5 feet from the travelled way, the driver eye height 3.5 feet above the roadway surface and the object height also 3.5 feet above the roadway surface.

$$ISD = 1.47 \times V(t_g)$$

V = Design Speed (mph)

t_g = Time gap (seconds)

From discussions with Yavapai County, it was determined that a design speed of 55 mph for Williamson Valley Road should be used for existing intersections. The time gap of 7.5 seconds for a passenger car was used assuming a two-lane cross-section, applicable to right- and left-turn vehicles from a stopped position. It is noted that a multilane adjustment and a grade adjustment to the time gap should be incorporated where appropriate. For left-turns onto two-way roadways with more than two lanes, 0.5 seconds (for passenger cars) is added to the time gap for each additional lane, from the left, to be crossed by the turning vehicle. If the minor-street approach grade is an upgrade that exceeds 3%, 0.2 seconds is to be added to the time gap for each percent grade for left turns. The AASHTO intersection sight distance criteria is provided in **Appendix C**. For the purpose of the field analysis conducted, it was assumed that 610 feet (1.47 * 55 * 7.5 = 610 feet, rounded) of intersection sight visibility was applicable at all locations. At each intersection, 3-foot high traffic cones were located to represent the driver eye location and an approaching vehicle 610 feet from the centerline of the intersection. Photos were taken approximately one-half foot above the traffic cone to determine if adequate line of sight visibility is provided to a driver when looking to the north or south along Williamson Valley Road.

The following table identifies locations where intersection sight visibility may be obstructed or obscured by foliage adjacent to the roadway or as a result of a physical obstruction such as an embankment or the vertical or horizon curvature of the roadway (based on a 55 mph design speed).

Table 6: Intersection Sight Distance Analysis Results

Intersection	Direction	Cause of Sight Distance Concern			
		Vertical Curvature	Horizontal Curvature	Embankment	Vegetation
Buena Vista Trail	Looking South	X			
Ridge Drive	Looking North				X
Pemberton Drive	Looking South	X	X	X	X
Kelly Drive	Looking North	X			
Stringfield Drive	Looking North	X			
Granite Park Drive	Looking North	X			
Dome Road	Looking South	X		X	

Examples of sight distance concerns due to vertical curvature are shown in Figure 1 and Figure 2. This photo in Figure 1 was taken at Granite Park Drive, and represents the view of a driver attempting to make a turn onto Williamson Valley Road. Figure 2 shows the vertical curve sight distance concern at Dome Road, representing the view of a driver looking south, attempting to make a left-turn onto Williamson Valley Road. Photos of the other sight distance concerns are provided in **Appendix D.**

Figure 1: Sight Visibility of Williamson Valley Road, Looking North from Granite Park Drive

Figure 2: Sight Visibility of Williamson Valley Road, Looking South from Dome Road

Input from Yavapai County staff suggested the study team investigate the possibility of moving vision obstruction for westbound motorists on Outer Loop Road caused by slower northbound right-turning motorists screening another northbound motorist in the through lane. A field visit confirmed that this condition could occur due to the high number of northbound right-turning motorists onto Outer Loop Road along with a curve in Williamson Valley Road to the south as shown in Figure 3. Right-turning vehicles from northbound Williamson Valley Road to eastbound Outer Loop Road can create a screening condition for a higher speed motorist in the northbound through lane.

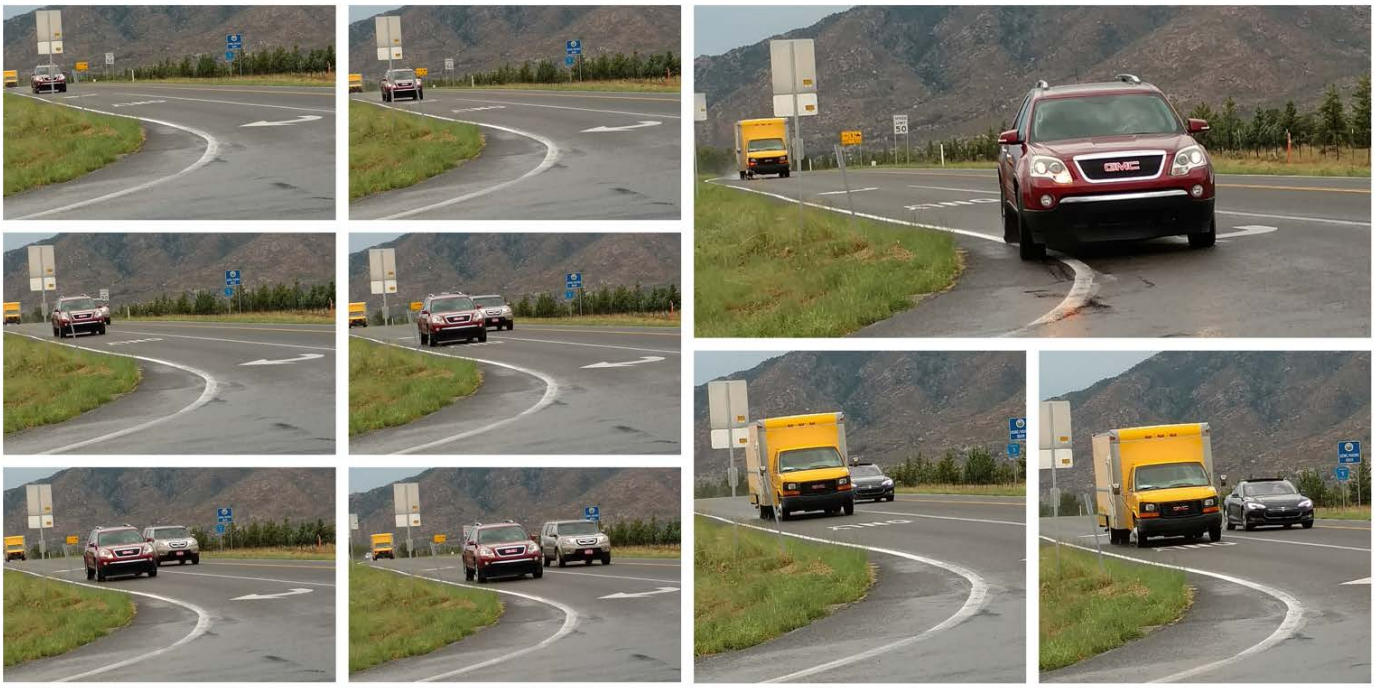

Figure 3: Sight Distance at Outer Loop Road, Looking South onto Williamson Valley Road

SIGNAL WARRANT ANALYSIS

Nine intersections were selected for a signal warrant analysis based on past traffic volume data, spacing, alignment across Williamson Valley Road, and engineering judgement. The intersections included Longview Drive, Cliff Rose Road/ Pemberton Drive, Bridle Path Road, Glenshandra Drive, American Ranch Road, Outer Loop Road, Stazenski Road, Almosta Ranch Road, and Nancy Drive. The signal warrant methodology followed the approach outlined in the *2009 MUTCD Chapter 4C: Traffic Control Signal Needs Studies*. Two traffic signal warrants were evaluated:

- **Warrant 1: Eight-Hour Vehicular Volume**
  Warrant 1 requires the criteria of Condition A, Condition B, or a combination of Condition A and Condition B to be satisfied during any 8 hours of an average day. If Condition A is satisfied, then Warrant 1 is satisfied and further analysis of Condition B or the combination of Condition A and B is not needed. If Condition B is satisfied, then Warrant 1 is satisfied and the combination of Condition A and Condition B does not need to be evaluated.

  <u>Condition A: Minimum Vehicular Volume</u>
  For a traffic signal to meet the criteria of Condition A, the minor-street volume and the major-street volume must exceed threshold levels over an eight-hour period. This warrant is intended for application at locations where a large volume of minor-street traffic is the primary reason to consider installing a traffic control signal.

  <u>Condition B: Interruption of Continuous Traffic</u>

  For a traffic signal to meet the criteria of Condition B, the minor-street volume and the major-street volume must exceed threshold levels over an eight-hour period. This warrant is intended for application at locations where Condition A is not satisfied and where the traffic volume on the major-street is so heavy that minor-street traffic suffers excessive delay or conflict entering or crossing the major street.

- **Warrant 2: Four-Hour Vehicular Volume**
  For Warrant 2, a nomograph is used to relate the minor street volume, the corresponding major street volume, and the lane configuration of both the minor and major streets. If the conditions exceed the appropriate curve for any four hours of the day, a traffic signal is warranted.

In the case of both warrants, a reduced set of criteria may be used per the MUTCD:

> *"If the posted or statutory speed limit or the 85th-percentile speed on the major street exceeds 40 mph, or if the intersection lies within the built-up area of an isolated community having a population of less than 10,000, the traffic volumes in the 70 percent columns may be used in place of the 100 percent columns."*

Williamson Valley Road has a posted speed limit of 50 mph between Pioneer Parkway and Nancy Drive. The 70% criteria was evaluated in addition to the 100% capacity requirements to determine if either criteria was satisfied. The MUTCD criteria for each traffic signal warrant is provided in **Appendix E**. The nine intersections were analyzed in the existing traffic conditions and for the 2025 and 2040 projections.

The signal warrant analysis based on the 2016 existing traffic volumes is shown in Table 7. In the analysis of existing volumes, no traffic signal warrants were met at any of the nine intersections.

Table 7: Signal Warrant Analysis, 2016 Existing Volumes

Intersection	2016 Existing Volumes					
	Meets Warrant 1A?		Meets Warrant 1B?		Meets Warrant 2?	
	100%	70%	100%	70%	100%	70%
Longview Drive	No	No	No	No	No	No
Cliff Rose/Pemberton	No	No	No	No	No	No
Bridle Path Road	No	No	No	No	No	No
Glenshandra Drive	No	No	No	No	No	No
American Ranch Road	No	No	No	No	No	No
Outer Loop Road	No	No	No	No	No	No
Stazenski Road	No	No	No	No	No	No
Almosta Ranch Road	No	No	No	No	No	No
Nancy Drive	No	No	No	No	No	No

The signal warrant analysis based on the projected 2025 traffic volumes is shown in Table 8. The intersection of Williamson Valley Road and Outer Loop Road in 2025 is projected to satisfy both Warrant 1 Condition A and Warrant 2 at the 70% criteria level.

Table 8: Signal Warrant Analysis, 2025 Projected Volumes

Intersection	2025 Projected Volumes					
	Meets Warrant 1A?		Meets Warrant 1B?		Meets Warrant 2?	
	100%	70%	100%	70%	100%	70%
Longview Drive	No	No	No	No	No	No
Cliff Rose/Pemberton	No	No	No	No	No	No
Bridle Path Road	No	No	No	No	No	No
Glenshandra Drive	No	No	No	No	No	No
American Ranch Road	No	No	No	No	No	No
Outer Loop Road	No	**Yes**	No	No	No	**Yes**
Stazenski Road	No	No	No	No	No	No
Almosta Ranch Road	No	No	No	No	No	No
Nancy Drive	No	No	No	No	No	No

The signal warrant analysis based on the projected 2040 volumes is shown in Table 9. In 2040, the intersection of Williamson Valley Road and Outer Loop Road is projected to satisfy Warrant 1 Condition A at the 100% criteria level, Warrant 1B at the 70% criteria level, and Warrant 2 at the 100% criteria level.

Table 9: Signal Warrant Analysis, 2040 Projected Volumes

Intersection	2040 Projected Volumes					
	Meets Warrant 1A?		Meets Warrant 1B?		Meets Warrant 2?	
	100%	70%	100%	70%	100%	70%
Longview Drive	No	No	No	No	No	No
Cliff Rose/Pemberton	No	No	No	No	No	No
Bridle Path Road	No	No	No	No	No	No
Glenshandra Drive	No	No	No	No	No	No
American Ranch Road	No	No	No	No	No	No
Outer Loop Road	**Yes**	N/A	No	**Yes**	**Yes**	N/A
Stazenski Road	No	No	No	No	No	No
Almosta Ranch Road	No	No	No	No	No	No
Nancy Drive	No	No	No	No	No	No

Per MUTCD Section 4C.01, paragraph 3, the satisfaction of one or more traffic signal warrants shall not in itself require the installation of a traffic control signal, however, it indicates a traffic signal may be considered for installation. The MUTCD states "*A traffic control signal should not be installed unless an engineering study indicates that installing a traffic control signal will improve the overall safety and/or operation of the intersection*." Further analysis of the intersection is recommended to determine the potential safety and operation benefits of installing a traffic control signal (or other type of intersection control) when the threshold criteria are met.

CAPACITY ANALYSIS

Two-Way Roadway Analysis

The latest edition of the Highway Capacity Software 2010 Two-Lane roadway analysis package (Version 6.80) was used to evaluate the peak-hour capacity of selected roadway segments along the Williamson Valley Road corridor. The level of service (LOS) condition for two-lane roadway segments is based on type of roadway facility. Williamson Valley Road is considered a Class I type highway (drivers having an expectation to travel at relatively high speeds) with LOS based on average travel speed (ATS) and percent of time spent following (PTSF) behind slower vehicles. LOS values A through C are typically associated with acceptable travel expectations of the driver. LOS D is considered to represent conditions that are limited and LOS E represent conditions that are unacceptable to the driver.

Software input parameters considered the roadway segments south of Glenshandra Drive to have 9 access points per mile and 100% no passing, while the roadway segments north of Glenshandra Drive assumed an access density of 5 per mile and 50 percent passing (similar to the previous KHA report). Default values for peak hour factors (0.92), truck/recreational vehicle percentages (4%), and lane widths of 12 feet, shoulder widths of 2 feet and level terrain, and a base free-flow speed of 60 mph were used for the other input parameters. Volume inputs were based on the volume data for the 2016, 2025 projected and 2040 projected volume conditions, only the higher volume direction of travel was analyzed (southbound travel analyzed in the AM peak hour, northbound travel analyzed for the PM peak hour). Table 10 presents the results of the two-lane analysis.

The two-lane capacity results indicate Williamson Valley Road operates at LOS D south of Outer Loop Road under existing traffic volume conditions, then deteriorates to LOS E south of Glenshandra Drive in the 2025 projected traffic volume scenarios. The poor level of service operation may be an indication of the potential need for roadway capacity improvements near the south end of the study area in the near future. In the northbound direction, LOS E occurs for the roadway segment south of Mendiburo Way, but not until the 2040 volume condition.

Table 10: Corridor Level of Service Summary

	Corridor Level of Service					
	2016 Existing		2025 Projected		2040 Projected	
Intersection Corridor (South to North)	Northbound PM	Southbound AM	Northbound PM	Southbound AM	Northbound PM	Southbound AM
Pioneer Parkway to Kelly Drive	D	D	D	E	E	E
Kelly Drive to Mendiburo Way	D	D	D	E	E	E
Mendiburo Way to Glenshandra	D	D	D	E	D	E
Glenshandra to Outer Loop Road	C	D	D	D	D	D
Outer Loop Road to Whispering Canyon	B	B	C	C	D	C
Whispering Canyon to Nancy Drive	B	B	C	C	C	C

Corridor Level of Service was also evaluated for a four-lane section along Williamson Valley Road for 2040 conditions. The evaluation indicated that the southernmost segment from Pioneer Parkway to Kelly Drive (highest volume) operated at a LOS A in both the AM and PM peak-hour conditions for 2040 conditions. This analysis would also mean that the portions of Williamson Valley Road north of Kelly Drive would also operate at a LOS A during both peak-hour conditions for both 2025 and 2040 in a four-lane configuration.

Intersection Analysis

An analysis of traffic capacity was conducted to determine the level-of-service (LOS) of the intersections along the Williamson Valley Road corridor. The traffic volumes at the 39 intersections were modeled using Synchro (Version 9). As traffic volumes increase in 2025 and 2040, many movements on the minor street approaches along the corridor drop to a LOS D, E, or F. The morning peak hour was determined to be more critical than the afternoon peak hour, with greater delay and reduced level of service as simultaneous gaps in both Williamson Valley Road traffic streams become less frequent to complete a left-turn movement from the side street. Details on the capacity analysis are provided in Technical Memorandum 1.

Poor side street operation will not be realized at some side street intersections until 2040, as shown in Table 11. The future side street volumes are a function of the two percent compounded traffic growth applied to the Williamson Valley Road through traffic. As indicted, all of the poor operating intersections are located south of Outer Loop Road, a result of morning commuters trying to complete a left-turn movement from the residential side street locations to access to the employment areas south of the study area. The movement experiencing the greatest delay is shown in Table 12.

Table 11: Intersection Movement Level of Service Summary

	Level-of-Service of Traffic Movements with Greatest Delay																	
	2016 - **AM**			2016 - **PM**			2025 - **AM**			2025 - **PM**			2040 - **AM**			2040 - **PM**		
	D	**E**	**F**	**D**	**E**	**F**	**D**	**E**	**F**	**D**	**E**	**F**	**D**	**E**	**F**	**D**	**E**	**F**
Buena Vista Trail													X					
Longview Drive							X								X	X		
Ridge Drive														X				
Cliff Road														X		X		
Pemberton Drive													X					
Merrill Drive							X							X		X		
McIntosh Drive							X							X		X		
Kelly Drive														X				
Oneal Road													X					
Bridle Path Road														X				
Lariat Lane													X					
Single Tree Street														X				
Shane Drive													X					
Granite Vista Road													X					
Glenshandra Drive													X					
Granite Oaks Drive													X					
American Ranch Road													X					
Outer Loop Road								X							X			

Table 12: Minor-Street Traffic Movements with the Greatest Delay

Minor Street Traffic Movements with LOS D, E, or F					
Intersection	**2025 LOS**	**2040 LOS**	**Peak Hour Volumes (AM)**		**Critical Traffic Movement**
			Left-Turn	**Right-Turn**	
Buena Vista Trail		D	1	11	Eastbound Left and Right
Longview Drive	D	F	42	6	Westbound Left and Right
Ridge Drive		E	4	1	Westbound Left and Right
Cliff Rose Road		E	5	1	Westbound Left and Right
Pemberton Drive		D	2	19	Eastbound Left and Right
Merrill Drive	D	E	15	2	Westbound Left and Right
McIntosh Drive	D	E	20	1	Westbound Left and Right
Kelly Drive		D	17	1	Westbound Left and Right
Oneal Road		D	8	3	Westbound Left and Right
Bridle Path Road		E	4	1	Westbound Left and Right
Lariat Lane		D	4	1	Westbound Left and Right
Single Tree Street		E	23	4	Westbound Left and Right
Shane Drive		D	5	1	Westbound Left and Right
Granite Vista Road		D	2	3	Eastbound Left and Right
Glenshandra Drive		D	35	1	Westbound Left and Right
Granite Oaks Drive		D	32	3	Westbound Left and Right
American Ranch Road		D	4	1	Westbound Left and Right
Outer Loop Road	E	F	249	97	Westbound Left

TURN LANE ANALYSIS

Each intersection was evaluated to determine if dedicated left- and right-turn lanes are warranted along Williamson Valley Road. The turn lane analysis followed the criteria in the *ADOT Traffic Engineering Guidelines and Processes, Section 245: Turn Lane Warrants.* The criteria warrants the installation of an exclusive turn lane based the through traffic volume, the turning movement volume, the posted speed limit, and the number of through lanes on the major street. The right-turn lane and left-turn lane warrant criteria is provided in **Appendix F**. The turning movement volumes and mainline volumes were evaluated for the existing volumes and for the 2025 and 2040 traffic projections. The objective of the analysis is to identify the potential need for dedicated turn lanes and determine if existing turn lane conditions meet ADOT design criteria. The results of the turn lane analysis are included in **Appendix G,** and a summary is shown in Table 13 and Table 14.

The results indicate the majority of existing turn lanes do not meet ADOT design criteria while the potential future need for the following dedicated turn lanes have been identified:

- A northbound left-turn lane at Buena Vista Trail, Pemberton Drive, Rainmaker, Sharps Road, Stazenski Road, and Cielo Grande
- A northbound right-turn lane at Black Jack Ridge Road
- A southbound left-turn lane at Outer Loop Road

Table 13: List of Turning Movements with the Potential for Future Turn Lane Improvements based on Volume Criteria

Turning Movements for Potential Future Improvements			
Existing Turn Lanes with Inadequate Storage Length (Turn Lanes Warranted by 2040)		Turn Lane Warrants Met by 2040 (Lanes That Do Not Currently Exist)	
Merrill Drive	NB Right-Turn	Buena Vista Trail	NB Left-Turn
Kelly Drive	NB Right-Turn	Pemberton Drive	NB Left-Turn
Oneal Road	NB Right-Turn	Rainmaker	NB Left-Turn
Single Tree Street	NB Right-Turn	Blackjack Ridge Road	NB Right-Turn
Glenshandra Drive	NB Right-Turn	Outer Loop Road	SB Left-Turn
Bard Ranch Road	NB Right-Turn	Sharps Road	NB Left-Turn
American Ranch Road	NB Left-Turn	Stazenski Road	NB Left-Turn
Stazenski Road	NB Right-Turn	Cielo Grande	NB Left-Turn
Whispering Canyon Drive	NB Left-Turn		

Table 14: Existing Turn Lane Storage Length Adequacy

Intersection	Existing Turn Lane	Existing Storage Length (ft)	ADOT Criteria - Storage Length (ft)		Meets Minimum Storage Length Criteria?	Turn Lane Warranted by 2040?
			Desirable	Minimum		
Pioneer Parkway	SB Left-Turn	500	440	285	Yes	Yes
Longview Drive	NB Right-Turn	205	350	205	Yes	Yes
Cliff Rose Road	NB Right-Turn	150	350	205	No	No
Merrill Drive	**NB Right-Turn**	**60**	**350**	**205**	No	Yes
McIntosh Drive	NB Right-Turn	35	350	205	No	No
Kelly Drive	**NB Right-Turn**	**55**	**350**	**205**	No	Yes
Oneal Road	**NB Right-Turn**	**90**	**350**	**205**	No	Yes
Lariat Lane	NB Right-Turn	85	350	205	No	No
Single Tree Street	**NB Right-Turn**	**100**	**350**	**205**	No	Yes
Granite Park Drive	NB Left-Turn	60	350	205	No	No
Glenshandra Drive	**NB Right-Turn**	**70**	**350**	**205**	No	Yes
Granite Oaks Drive	NB Right-Turn	530	350	205	Yes	Yes
Granite Oaks Drive	SB Right-Turn	90	350	205	No	No
Bard Ranch Road	**NB Right-Turn**	**175**	**350**	**205**	No	Yes
American Ranch Road	**NB Left-Turn**	**80**	**350**	**205**	No	Yes
American Ranch Road	NB Right-Turn	250	350	205	Yes	No
American Ranch Road	SB Left-Turn	225	350	205	Yes	No
American Ranch Road	SB Right Turn	80	350	205	No	No
Outer Loop Road	NB Right-Turn	305	400	205	Yes	Yes
Stazenski Road	**NB Right-Turn**	**160**	**350**	**205**	No	Yes
Whispering Canyon Dr	**NB Left-Turn**	**175**	**350**	**205**	No	Yes
Almosta Ranch Rd	**NB Left-Turn**	**200**	**350**	**205**	Yes	Yes
Inscription Canyon Dr	NB Left-Turn	200	350	205	Yes	Yes

Note: *Highlighted rows indicate existing turn lanes that are warranted by the year 2040, but do not meet the ADOT criteria for minimum storage length*

CRASH ANALYSIS

The most recent five years of crash data (2011-2015) was provided by Yavapai County for Williamson Valley Road from Pioneer Parkway to Nancy Drive, and hard copy police reports were obtained where available. This information was cross-referenced with the ADOT ALISS database to obtain a complete set of crashes along the corridor for the study period.

There were a total of 115 crashes within the five-year period. On average, 23 crashes occurred per year. All crashes on Williamson Valley Road from 2011 to 2015 are displayed in Figure 4. Crashes that may have been prevented with a dedicated turn lane are shown on the map with an "X". Additional details on the intersections where turn lanes would have the potential to reduce one or more crashes are provided in Table 15.

The most crashes occurred in 2015 (30 crashes) and the fewest crashes occurred in 2013 (17 crashes). Crashes occurred most frequently on Tuesdays, Thursdays, and Saturdays. Morning and evening peak

periods also experienced greater crash frequency. Crashes occurred most frequently from 6 – 7 AM and from 6 – 7 PM. The crash statistics by year, weekday, and time of day are provided in Figure 5.

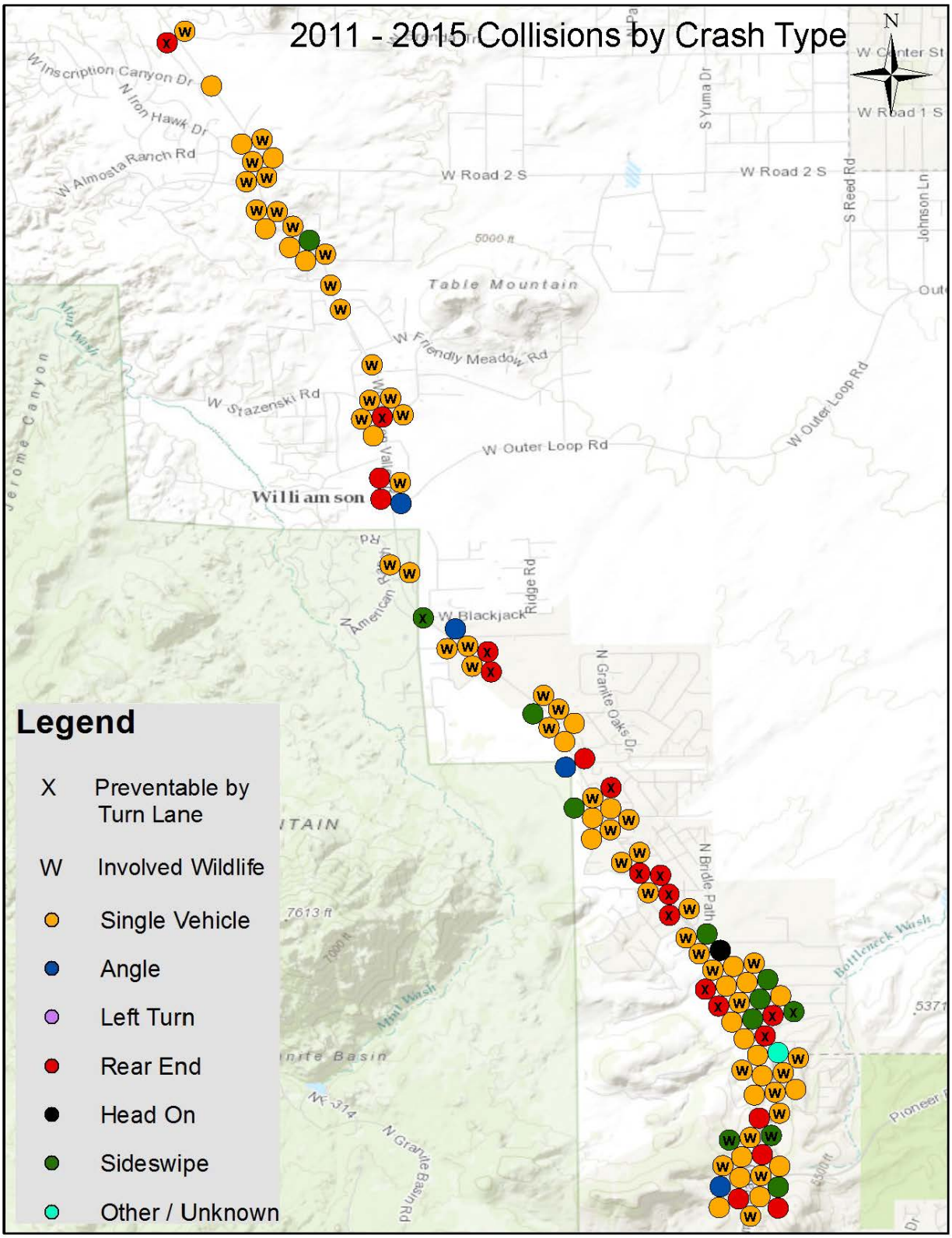

Figure 4: 2011-2015 Crash Map by Manner of Collision, All Crashes

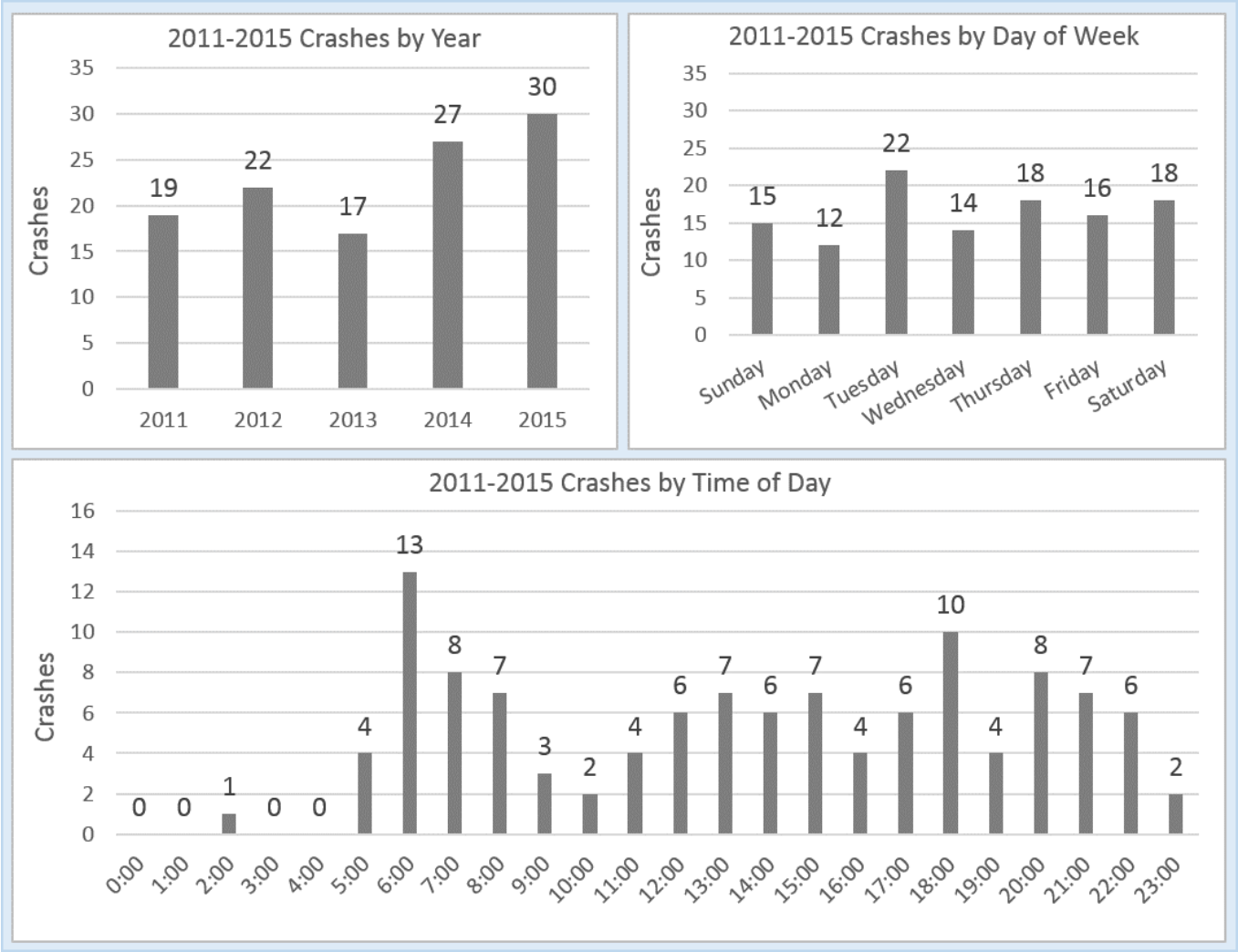

Figure 5: Crash Statistics by Year, Weekday, and Time of Day

Seventy-five percent of the crashes resulted in property damage only, and 14% were possible injury crashes and 8% were non-incapacitating injuries. The majority of crashes occurred during daylight hours (51%), followed by dark, unlighted conditions (31%). In terms of the manner of collision, 68% of all crashes were single-vehicle crashes. A large portion of these single-vehicle collisions are attributed to wildlife-related crashes.

One fatal and two serious injury crashes occurred on the study segment during the 5-year study period. All were single-vehicle crashes. The fatal crash involved a northbound motorcyclist on April 8, 2012 who ran off the road 100 feet south of Cliff Rose Road at 7:18 PM (dusk) on a curved section of roadway traveling at a high rate of speed. The motorcyclist and had a high BAC at the time of the crash, and no other vehicles were involved.

One of the serious (incapacitating) injury crashes occurred at approximately mile marker 12 (approximately 320 feet north of Cielo Grande) at 6:17 p.m. on May 7, 2011. This crash involved a southbound motorist who ran off the road to avoid striking a deer. While the crash occurred during

daylight conditions and the pavement was dry, the motorist was negotiating a downhill grade on a curve. The investigating officer reported that the motorist was travelling too fast for conditions.

The other serious injury crash occurred on March 8, 2013 at 3:36 p.m. at Buena Vista Trail. This crash involved a southbound motorist who was traveling on a snowy/icy road during sleet/hail conditions when the driver ran off the road and rolled over. Although occurring during daylight conditions, visibility was reported to be poor at the time of the crash. It is believed that the southbound motorist was attempting to turn right onto Buena Vista Trail at the time they ran off the road.

Crash statistics by injury severity, light condition, and the manner of collision is shown in Figure 6.

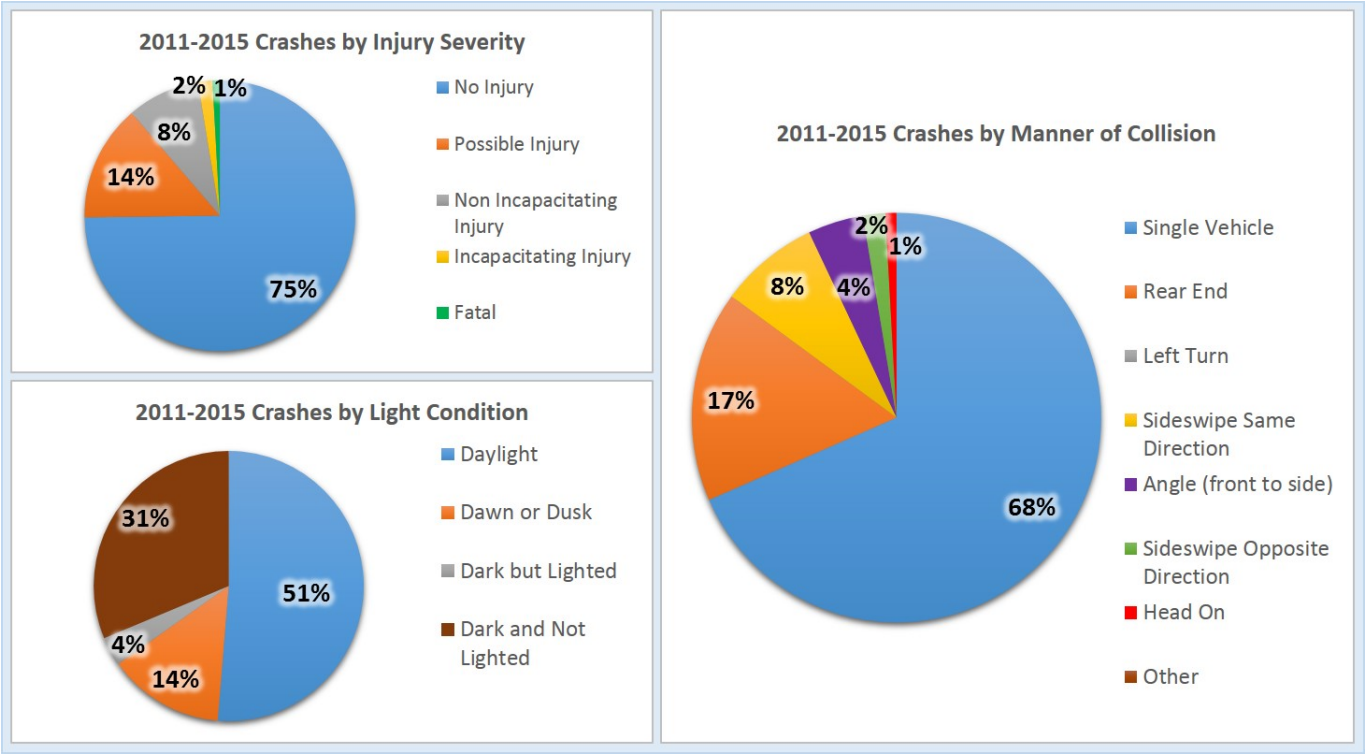

Figure 6: Crash Statistics by Injury Severity, Light Condition, and Manner of Collision

The left- and right-turn related crashes that occurred at intersections without turn lanes are listed in Table 15. These crashes indicate the locations where the addition of a dedicated turn lane has the potential to reduce crashes.

There are two intersections where multiple turning vehicle-related crashes occurred, Pemberton Drive and Buchanan Drive. The crashes that occurred at Pemberton Drive both involved a northbound left-turn motorist, and both crashes at Buchanan Drive involved a northbound left-turn motorist. The turning crash data and the turn lane analysis results were both considered in the evaluation for potential turn lane installation.

Table 15: List of crashes that may have been prevented with a left- or right-turn lane

Intersection	Crash Type	Date of Crash	Time of Crash
Ridge Drive	NB Right-Turn	11/3/2013	3:00 PM
Pemberton Drive	NB Left-Turn	9/18/2012	4:48 PM
Pemberton Drive	NB Left-Turn	2/5/2015	10:14 AM
Merrill Drive	SB Left-Turn	5/30/2014	3:45 PM
Kelly Drive	SB Left-Turn	3/2/2013	1:26 PM
Mendiburo Way	NB Left-Turn	1/28/2013	6:32 PM
Rainmaker	NB Left-Turn	4/23/2013	2:57 PM
Love Lane	NB Left-Turn	12/5/2011	11:31 AM
Short Spur Road	NB Left-Turn*	6/5/2011	12:35 PM
Glenshandra Drive	NB Right-Turn	11/30/2011	4:13 PM
Buchanan Drive	NB Left-Turn	9/20/2012	12:23 PM
Buchanan Drive	NB Left-Turn	5/12/2014	8:39 AM
Blackjack Ridge Road	SB Left-Turn	5/6/2014	3:55 PM
Stazenski Road	SB Left-Turn	9/25/2013	5:13 PM
Nancy Drive	NB Right-Turn	5/23/2014	11:30 PM

***Note:** This left-turn crash occurred near Short Spur Road; the crash occurred at a driveway just north of the intersection on the west side of Williamson Valley Road*

The collision between a motor vehicle and an animal was the most common first harmful event (44% of total crashes). These wildlife-related crashes occurred more often in 2014 and 2015, and they occurred most frequently in late fall/winter months. Figure 7 provides additional data on wildlife-related crash trends.

2011-2015 Crashes by First Harmful Event			
First Harmful Event	Crashes	First Harmful Event	Crashes
Animal Wild Game	51	Parked Motor Vehicle	2
Motor Vehicle in Transport	30	Traffic Signal Support	2
Other Fixed Object	9	Cyclist	2
Overturn or Rollover	7	Cargo Equipment Loss	1
Traffic Sign Support	5	Tree or Bush Stump	1
Not Reported	2	Other Traffic Barrier	1
Run Off Road Left	2	Other Post Pole or Support	0

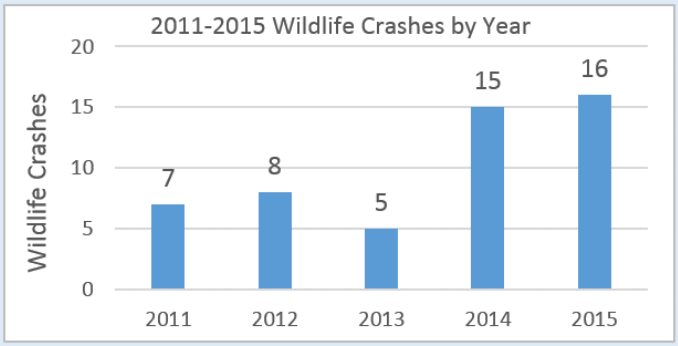

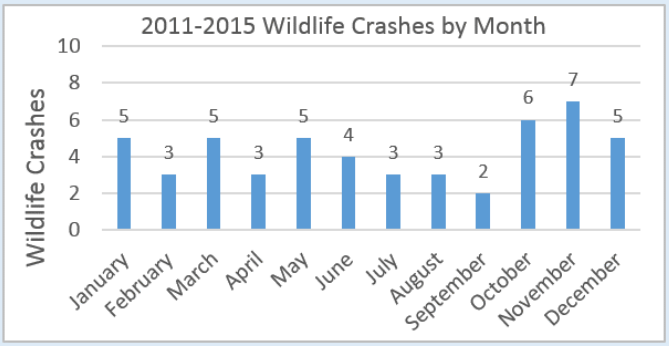

Figure 7: Wildlife Crash Statistics

The crashes occurring along Williamson Valley Road from 2011 to 2015 that did not involve wildlife are shown in Figure 8. Wildlife-related collisions were removed from the crash map to focus on crashes that have the potential to be reduced with infrastructure improvements. The crashes are plotted in Figure 8 by manner of collision. Similar to Figure 4, crashes that may have been prevented with a dedicated turn lane are shown on the map with an "X".

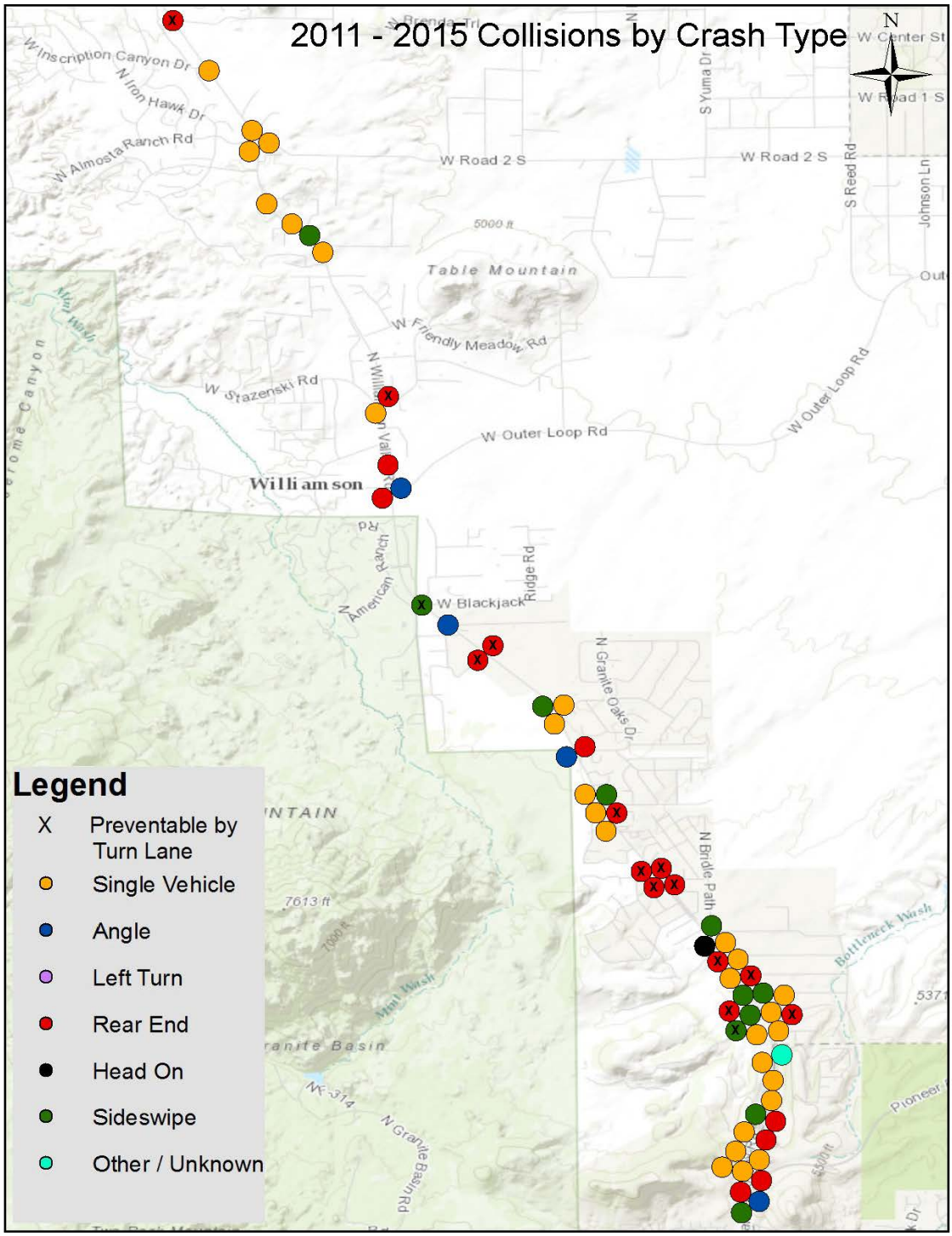

Figure 8: 2011-2015 Crash Map by Manner of Collision, Wildlife-Related Crashes Removed

DESIGN ALTERNATIVES

The study team collected traffic, crash and sight distance data along the corridor and evaluated traffic growth to determine the traffic impact at all intersections for the desirability of turn lanes, the turn lane design (length) and the desirability of a traffic signal at key locations. Stakeholder input has been obtained from Yavapai County staff and the study team conducted a review of existing conditions along the study corridor. Each study intersection along the corridor was evaluated for potential improvements based on the collected information.

All new corridor improvements were designed based on the posted speed limit plus 10 mph (60 mph) for Williamson Valley Road. Yavapai County prefers symmetrical widening as opposed to directional or asymmetrical widening for left-turn lanes. Using ADOT length criteria for the design of left- and right-turn lanes, the design would result in a 205-foot storage length (unless additional stacking is required). A 12-foot wide left-turn lane would have a 140-foot opening preceded by a 360-foot taper for symmetrical widening. The provision for a 12-foot wide center two-way left-turn lane (TWLTL) would be preceded by a 360-foot taper as well.

Improvements that may be implemented quickly or at a low cost are indicated as "short-term improvements". Potential projects are listed from south to north along the corridor, and some listed capital projects are mutually exclusive. A summary of the capital improvement countermeasures are provided after the evaluation of each intersection.

PIONEER PARKWAY

Fully improved with 4 through lanes and dual southbound left-turn lanes, a northbound right-turn bypass lane, and traffic signal with streetlights. 24-hour count completed. No changes are recommended.

PROJECTS TO EVALUATE: None

BUENA VISTA TRAIL/LONGVIEW DRIVE

Requested Signal Warrant Analysis. 12-hour count completed and signal warrant analysis conducted (not warranted). Longview Drive (east leg) is City of Prescott jurisdiction. Existing 200-foot northbound right-turn lane onto Longview Drive.

- Consider possible realignment of east and west legs. Options should include evaluation for a possible roundabout/hybrid intersection relocation. – Stakeholder input (Does not have interlocking left-turn condition).
- Possible sight distance concern due to vertical curvature on south leg based on sight distance review.
- Eastbound Buena Vista Trail LOS D in 2040 (AM) – Synchro Analysis (EB traffic: 11 right turns and 1 left turn during AM peak).
- Westbound Longview Drive LOS D in 2025 (AM) and LOS F in 2040 (AM), LOS D in 2040 (PM) - Synchro Analysis (WB traffic: 42 left-turns and 6 right turns during AM peak).
- Northbound left-turn lane onto Buena Vista Trail meets warrants by 2040
- Northbound right-turn lane at Longview Drive is adequate and meets warrants by 2040

PROJECTS TO EVALUATE:

- **SHORT-TERM IMPROVEMENT:** Provide northbound advance intersection warning sign and supplemental distance plaque on Williamson Valley Road.

A. Realign Buena Vista Trail (west leg) approximately 95 feet to the north to align with Longview Drive (east leg) realigned about 95 feet to the south, and provide 205-foot northbound and southbound left-turn lanes. Reconstruct Williamson Valley Road south of Buena Vista Trail for approximately 1,040 feet to improve sight distance related to vertical curvature. (See Appendix H.1)

B. Provide a TWLTL from 300 feet north of Longview Drive to 300 feet south of Buena Vista Trail with no realignment of either leg. Reconstruct Williamson Valley Road south of Buena Vista Trail for approximately 930 feet to improve sight distance related to vertical curvature (See Appendix H.2)

RIDGE DRIVE

Private driveway exists on the west side of intersection, slightly offset. This intersection is located at the south end of a curve section and has a potential to accommodate a new subdivision.

- Possible improvements may can be combined with improvements to Cliff Rose Road/Pemberton Drive - Stakeholder input.
- Sight distance issue due to vegetation along the west side of Williamson Valley Road to the north (trim or remove bushes/trees).
- Westbound Ridge Drive LOS E in 2040 – Synchro Analysis (WB traffic: 4 left turns and 1 right turn during AM peak.)
- 1 crash that may have been addressed by a northbound right-turn lane (11/3/13 at 3 PM).

PROJECT TO EVALUATE:

- **SHORT-TERM IMPROVEMENT:** Trim/remove bushes along the west side of Williamson Valley Road north of Ridge Drive.

CLIFF ROSE ROAD/PEMBERTON DRIVE

Offset intersections separated by about 70 feet. Near curved roadway section. Existing 150-foot northbound right-turn lane onto Cliff Rose Road. 24-hour count completed and signal warrant analysis conducted (not warranted).

- Consider possible realignment of east and west legs – Stakeholder input (Has interlocking left-turn movements.)
- Explore the potential to combine improvements at this intersection with improvements at Ridge Drive – Stakeholder input.
- Sight distance issue at Pemberton Drive due to vertical and horizontal curvature and embankment to the south based on sight distance review.
- Consider northbound left-turn lane at Pemberton Drive - Stakeholder input and meets ADOT warrants in 2016.
- Two crashes (1 in 2012 and 2015) that may have been addressed by a northbound left-turn lane.
- Westbound Cliff Rose Road LOS E by 2040 (AM) and LOS D by 2040 (PM) – Synchro Analysis (WB traffic: 5 left turns and 1 right turn during AM peak).
- Eastbound Pemberton Drive LOS D by 2040 (PM) – Synchro Analysis (EB traffic: 19 right turns and 2 left turns during AM peak).

PROJECTS TO EVALUATE:

- **SHORT-TERM IMPROVEMENT:** Trim/remove bushes along the east side of Williamson Valley Road south of Cliff Rose Road

C. Realign Pemberton Drive (west leg) to align with Cliff Rose Road (east leg) and provide 205-foot north/south left-turn lanes. Reconstruct Williamson Valley Road south of Pemberton Drive for approximately 720 feet to improve sight distance related to vertical curvature. Cut back the embankment and vegetation on the west side of Williamson Valley Road. (See Appendix H.3)

MERRILL DRIVE

T-intersection to the east. No Stakeholder input. Existing northbound 60-foot right-turn lane. Located 140 feet south of Nebeker Circle intersection (short cul-de-sac).

- Southbound left-turn-related crash (5/30/14 at 3:45 PM).
- Westbound Merrill Drive LOS D by 2025 (AM), and LOS E by 2040 (AM) and LOS D by (PM) – Synchro Analysis (WB traffic: 15 left turns and 2 right turns during AM peak).
- Northbound 60-foot right-turn lane meets ADOT warrant for installation by 2040, but does not currently meet ADOT length (205 feet).

PROJECT TO EVALUATE:

- See Project D for improvements to Merrill Drive.

MCINTOSH DRIVE

Four-leg intersection (west leg is private driveway). No stakeholder input

- Westbound McIntosh Drive LOS D by 2025 (AM), and LOS E by 2040 (AM), and LOS D by 2040 (PM) – Synchro Analysis (WB traffic – 20 left turns and 1 right turn during the AM peak).
- 35-foot northbound right-turn lane does not meet ADOT minimum length, but does not meet ADOT warrant for installation.

PROJECT TO EVALUATE:

D. Provide a center TWLTL from 300 feet north of McIntosh Drive to 300 feet south of Merrill Drive (1,547-foot TWLTL) and extend the northbound right-turn lane at Merrill Drive and McIntosh Drive to 205 feet. (See Appendix H.4)

KELLY DRIVE/STRINGFIELD DRIVE/ONEAL ROAD

Explore possible realignment. There is low future growth potential from these roads. Northbound 55-foot right-turn lane onto Kelly Drive. Interlocking left-turn condition between Kelly Drive and Stringfield Drive (150-foot storage). Northbound 90-foot right-turn lane onto Oneal Road. No interlocking left–turn condition between Stringfield Drive and Oneal Road.

- Explore possible east/west realignment – Stakeholder input.
- Sight distance issue at Kelly Drive, Stringfield Drive and Oneal Road due to curve to the north.
- Westbound Kelly Drive LOS E by 2040 (AM) – Synchro Analysis (WB - 17 left turns and 1 right turn during AM peak).
- Westbound Oneal Road LOS D by 2040 (AM) – Synchro Analysis.

- Northbound right-turn lane length does not meet ADOT length at Kelly Drive, but meets ADOT warrant for installation by 2040.
- Northbound right-turn lane length does not meet ADOT length at Oneal Road, but meets ADOT warrant for installation by 2040.
- Southbound crash at Kelly Drive may have been addressed by a left-turn lane (3/2/13 at 1:26 p.m.)

PROJECTS TO EVALUATE:

- **SHORT-TERM IMPROVEMENT:** Install southbound intersection warning sign(s) with supplemental distance panels.

E. Realign Oneal Road to provide an improved 90-degree angle to Williamson Valley Road, and provide a center TWLTL from 400 feet north of Oneal Road to 300 feet south of Kelly Drive (1,310-foot TWLTL). Extend northbound 55-foot right-turn lane at Kelly Drive to 205 feet, and extend northbound 90-foot right-turn lane at Oneal Road to 205 feet. Reconstruct Williamson Valley Road north of Kelly Drive for approximately 830 feet to improve sight distance related to vertical curvature. (See Appendix H.5)

BRIDLE PATH

Four-leg intersection. 24-hour count. Signal warrant analysis conducted (not warranted). No stakeholder input.

- Westbound Bridle Path LOS E by 2040 (AM) – Synchro Analysis (4 WB left turns and 1 WB right turn during AM peak period).

PROJECTS TO EVALUATE: None

SILVER JUNIPER RANCH ROAD/LARIAT LANE/LEVIE LANE

Near bottom of downgrade, review sight distance. Retain frontage roads. Three closely spaced intersections. Silver Juniper Road – T to the west. Lariat Lane is a T to the east (182 feet north of Silver Juniper), and Levie Lane is a T-intersection to the west, 160 feet north of Lariat Lane. Short (85–foot) northbound right-turn lane onto Lariat Lane. Interlocking left-turn condition between Lariat Lane and Levie Lane (160 feet apart). No traffic count on Silver Juniper Ranch Road (7 homes have access to this dirt road).

- Extend west side frontage road (Stage Line Trail) to Silver Juniper Ranch Road to eliminate one access point onto Williamson Valley Road and realign access point to Lariat Lane on the west side - Stakeholder input.
- Westbound Lariat Lane will operate at LOS D in 2040 (AM) – Synchro Analysis (WB traffic: 4 left turns and 1 right turn during the AM peak).
- Northbound right-turn lane onto Lariat Lane does not meet ADOT warrants.

PROJECTS TO EVALUATE:

- **SHORT-TERM IMPROVEMENT:** Eliminate informal access points from the east side frontage road to Williamson Valley Road – prevent informal crossing of east side frontage road median island to better control access.

F. Close Silver Juniper Ranch Road at Williamson Valley Road. Extend west-side frontage road to Silver Juniper Ranch Road (100 feet). Realign west side frontage road opening 100 feet to the north to align with Lariat Lane. Provide a center TWLTL from Mendiburo Way to 300 feet south of Lariat Lane (1,060 foot TWLTL). Extend northbound right-turn lane to 205 feet at Lariat Lane. (See Appendix H.6)

MENDIBURO WAY

T-intersection to the west. West side frontage road exists with a connection to the south (Levie Lane) and north (Rainmaker). No Stakeholder input.

- 1 northbound crash (5/30/14 at 3:45 p.m.) that may have been addressed by a left-turn lane.

PROJECTS TO EVALUATE:

- See the above Project F for Silver Juniper Ranch Road/Lariat Lane/Levie Lane

RAINMAKER/SINGLE TREE STREET

Offset intersections about 90 feet apart (interlocking left turns). Existing 100-foot northbound right-turn lane onto Single Tree Street. School bus stop.

- Realign streets to eliminate offset or close Rainmaker access to Williamson Valley Road and create new opening to west side frontage road at Single Tree Street alignment – Stakeholder input.
- Westbound Single Tree Street LOS E by 2040 (AM) – Synchro Analysis (WB traffic: 23 left turns and 1 right turn during AM peak).
- Northbound right-turn lane length (100 feet) does not meet ADOT design criteria at Single Tree Street. Northbound right-turn lane warranted by 2040.
- Northbound left-turn-related crash at Rainmaker (4/23/13 at 2:57 p.m.) that may have been addressed by a left-turn lane.

PROJECT TO EVALUATE:

- See Project G for improvements to Rainmaker and Single Tree Street.

LOVE LANE

T-intersection to the west. West-side frontage road south of Love Lane has a connection to Rainmaker. Located 275 feet south of Short Spur Trail. No Stakeholder input.

- Northbound left-turn-related crash (12/5/11 at 11:31 a.m.) that may have been addressed by a left-turn lane.

PROJECT TO EVALUATE:

G. Close Rainmaker on west side and create a new frontage opening in alignment with Single Tree Street and provide a center 1,040-foot TWLTL from Love Lane to 300 feet south of Single Tree Street. Extend northbound 100-foot right-turn lane at Single Tree Street to 205 feet. (See Appendix H.7)

SHANE DRIVE

T-intersection to the east with a skewed intersection approach.

- Stakeholder input - Evaluate right-turn lane. The volumes are not sufficient to warrant the turn lane.
- Westbound Shane Drive will operate at LOS D in 2040 (AM) – Synchro Analysis (WB traffic: 5 left turns and 1 right turn during AM peak).

PROJECTS TO EVALUATE: None

GRANITE PARK DRIVE

T-intersection to the west. Existing 60-foot northbound left-turn pocket. Prior 4-lane project attempted to design a southbound right-turn lane at Granite Park Drive near curve section of road, but the right-turn lane design was moved north to Granite Vista due to ROW limitations and opposition from property owner. Possible visibility constraints.

- Sight distance issue due to vertical curvature on north leg based on a sight distance review.
- Northbound 60-foot left-turn lane length is less than minimum storage length, but does not meet ADOT warrants.

PROJECT TO EVALUATE:

- **SHORT-TERM IMPROVEMENT:** Install southbound advance intersection warning sign and supplemental distance panel.

H. Reconstruct Williamson Valley Road north of Granite Park Drive for approximately 810 feet to improve sight distance related to vertical curvature. (See Appendix H.8)

GRANITE VISTA

T-intersection to the west (somewhat aligns with 2 driveways on east side).

- Eastbound Granite Vista will operate at LOS D in 2040 (AM) – Synchro Analysis (EB traffic: 2 left turns and 3 right turns during AM peak hour).
- Potential desire for southbound right-turn deceleration lane at Granite Vista (instead of Granite Park Drive) – Stakeholder input.

PROJECTS TO EVALUATE: None

GLENSHANDRA DRIVE

T-intersection to the east. Future development with smaller lot sizes could generate higher future traffic volumes. Existing northbound 70-foot long right-turn lane. 24-hour count completed and signal warrant analysis conducted (not warranted).

- Provide southbound left-turn lane – Stakeholder input (Only 3 SB left turns during the peak hour – well below ADOT threshold for a left-turn lane).
- Westbound Glenshandra Drive will operate at LOS D in 2040 (AM) – Synchro Analysis (35 WB left turns and 1 WB right turn during AM peak).
- Northbound 70-foot right-turn lane meets ADOT warrants, but does not meet ADOT storage length (205 feet).
- Northbound crash (11/30/11 at 4:13 p.m.) that may have been addressed by an offset right-turn lane.

PROJECT TO EVALUATE:

I. Extend northbound 70-foot right-turn lane at Glenshandra Drive to 205 feet. (See Appendix H.9)

GRANITE OAKS DRIVE

T-intersection to the east that aligns with trailhead access on west leg that gets heavy use. It may require left-turn lane (both sides of this intersection counted for turning movements). Existing northbound 530-foot right-turn storage lane, and existing 90-foot southbound right-turn storage lane to trailhead access.

- Provide northbound and southbound left-turn lanes – Stakeholder input (Does not meet ADOT threshold. Only 2 NB left turns during the AM peak hour into the trailhead access and only 4 SB left turn movements during the AM peak hour onto Granite Oaks Drive). This intersection likely has greater turning movements on the weekends (due to the trailhead access), which was not measured since the traffic counts were collected on a weekday. The left-turn warrants, although not met using weekday volumes, may have a greater likelihood to be met for weekend conditions. There is a greater possibility that larger vehicles (such as vehicles pulling horse trailers) use the trailhead access. This increases the desirability to provide left-turn storage to improve comfort and operations for these larger left-turning vehicles.
- Westbound Granite Oaks Drive will operate at LOS D in 2040 (AM) – Synchro Analysis (WB traffic: 32 left turns and 3 right turns, one through movement during AM peak).
- Southbound 90-foot right-turn lane does not meet ADOT minimum length criteria, but not warranted.

PROJECT TO EVALUATE:

J. Provide a center TWLTL from 300 feet north of Granite Oaks Drive/trailhead access to 300 feet south of Granite Oaks Drive/trailhead access. (See Appendix H.10)

BARD RANCH ROAD

T-intersection to the east. Existing 175-foot northbound right-turn lane. This intersection is near a curve section of road (immediately south of a curve). Check for sight visibility constraints.

- Provide southbound left-turn lane – Stakeholder input (close to meeting ADOT threshold – 8 SB left turns instead of threshold of 12. There is a curved southbound approach to the intersection.)
- Northbound 175-foot right-turn lane meets ADOT warrant, but does not meet ADOT storage length (205 feet).
- 4 nighttime crashes occurred at this intersection.

PROJECT TO EVALUATE:

K. Provide 205-foot southbound left-turn lane at Bard Ranch Road and extend northbound right-turn lane to 205 feet. (See Appendix H.11)

BUCHANAN DRIVE

T-intersection to the west. Possible school bus stop. (School bus stop locations may change from year to year).

- Provide southbound right-turn lane and northbound left-turn lane – Stakeholder input (close to meeting ADOT threshold – 8 NB left turns instead of threshold of 12).
- High speeds/volumes exist – stakeholder input.
- Two northbound crashes (9/20/12 at 12:23 p.m. and 5/12/14 at 8:39 p.m.) that may have been addressed by a left-turn lane.

PROJECT TO EVALUATE:

L. Provide 205-foot northbound left-turn lane at Buchanan Drive. (See Appendix H.12)

SCARLETT DRIVE

T-intersection to the west. No Stakeholder input

PROJECTS TO EVALUATE: None

CHIPMUNK ROAD

T-intersection to the east. No stakeholder input

PROJECTS TO EVALUATE: None

BLACKJACK RIDGE ROAD

T-intersection to the east. Possible school bus stop. (School bus stop locations may change from year to year).

- Provide northbound right-turn lane and southbound left-turn lane – Stakeholder input (Below ADOT threshold for SB left-turn lane with 4 peak hour left-turns instead of 12. However, there is a curved southbound approach to the intersection).
- Northbound right-turn lane meets ADOT warrant.
- 1 southbound crash (5/6/14 at 3:55 p.m.) that may have been addressed by a left-turn lane.

PROJECTS TO EVALUATE:

- **SHORT-TERM IMPROVEMENT:** Provide distance panel to existing southbound advance intersection warning sign for Williamson Valley Road.

M. Provide 205-foot southbound left-turn lane at Blackjack Ridge Road and 205-foot northbound right-turn lane. (See Appendix H.13)

AMERICAN RANCH ROAD

Four-leg intersection. 12-hour count completed and signal warrant analysis conducted (not warranted). East and west legs both private. Existing northbound 80-foot left-turn lane, northbound 250-foot right-turn lane, southbound 80-foot right-turn lane, and southbound 225-foot left-turn lane. No stakeholder input.

- Northbound 80-foot left-turn lane meets ADOT warrant, but the existing left-turn lane is less than the ADOT desired length (205 feet). There is a horizontal curve on the northbound approach to the intersection.
- Southbound 80-foot right-turn lane is less than the ADOT desired length (205 feet), but right-turn lane does not meet ADOT warrant.
- Westbound American Ranch Road will operate at LOS D in 2040 (AM) – Synchro Analysis (WB traffic: 4 left turns, 1 thru, 1 right turn during AM peak).

PROJECT TO EVALUATE:

N. Extend northbound 80-foot left-turn lane to 205 feet at American Ranch Road. (See Appendix H.14)

OUTER LOOP ROAD / OLD STAGE ROAD

Provides access to SR 89/Chino Valley. Intersection used as detour route when crashes close SR 89 / Williamson Valley Road. West leg is Old Stage Road (unpaved). Separate westbound right- and left-turn lanes. Existing 305-foot northbound right-turn lane. 24-hour count completed and signal warrant analysis conducted.

- Provide southbound left-turn lane - Stakeholder input. Southbound left-turn lane meets ADOT warrant in 2016.
- Sight distance issue due to right-turn traffic lane on south leg (moving sight obstruction) based on sight distance review and Stakeholder input.
- Meets traffic signal warrant 1A and 2 with 70% reduction in 2025, and warrant 1A and 2 at 100% volumes in 2040.
- Westbound Outer Loop Road left-turn movement will operate at LOS E in 2025, and LOS F in 2040 during the AM peak period – Synchro Analysis without traffic signal.
- One angle crash occurred that may have been addressed by a traffic signal (09/22/15 at 12:30 pm) and two crashes occurred that may have been addressed by a roundabout (12/11/11 at 8:57 am and 09/22/15 at 12:30 pm)

PROJECTS TO EVALUATE:

O. Provide 205-foot northbound and 280-foot southbound left-turn lanes at Outer Loop Road and convert northbound right-turn lane to an offset-right turn lane. Pave the west leg up to the ROW line. (See Appendix H.15)
P. Provide traffic signal at Outer Loop Road along with 205-foot northbound and 280-foot southbound left-turn lane (no need for offset-right-turn lane with traffic signal) as well as street lighting. Pave approximately 100-feet on west leg and provide east/west left turn lanes. (See Appendix H.16)
Q. Provide modern roundabout with central/splitter islands and lighting at Outer Loop Road. Include paving of the west leg to the roundabout. (See Appendix H.17)

SHARPS ROAD

T-intersection to the west. No stakeholder input

- Northbound left-turn lane meets ADOT warrant by 2040

PROJECT TO EVALUATE:

R. Provide 205-foot northbound left-turn lane at Sharps Road. (See Appendix H.18)

STAZENSKI ROAD/WILLIAMSON VALLEY RANCH ROAD

Four-leg intersection. East leg is a private street. Existing northbound 160-foot right-turn lane. 12-hour count completed and traffic signal warrant analysis conducted (not warranted). No stakeholder input.

- Northbound 160-foot right-turn lane meets ADOT warrant in 2040, but it is less than the ADOT length (205 feet).
- Northbound left-turn lane meets ADOT warrant by 2040.
- Southbound crash (9/25/13 at 5:13 p.m.) that may have been addressed by a left-turn lane.

PROJECT TO EVALUATE:

S. Provide 205-foot northbound and southbound left-turn lanes at Stazenski Road/Williamson Valley Ranch Road. Extend northbound right-turn lane at Williamson Valley Ranch Road by 40 feet. (See Appendix H.19)

DOME ROAD/CIELO GRANDE

Offset intersection separated by 50 feet (not an interlocking left turn). East leg not paved (Dome Road). Both side streets are private. Most access points in this area are low volume, however, vegetation and the curved roadway section may dictate improvements.

- Sight distance issue from both streets due to vertical curvature on south leg. There is also an embankment issue looking south from Dome Road based on sight distance review.
- Northbound left-turn lane meets ADOT warrant by 2040 onto Cielo Grande (exceeds ADOT threshold by 1 vehicle). Horizontal curve exists on the northbound approach (south leg) to the intersection.

PROJECTS TO EVALUATE:

- **SHORT-TERM IMPROVEMENT:** Install northbound advance intersection warning sign and supplemental distance panel on Williamson Valley Road

T. Provide 205-foot northbound left-turn lane at Cielo Grande, and modify the side-slope along the east shoulder to improve sight distance at Dome Road. Reconstruct Williamson Valley Road south of Dome Road for approximately 250 feet to the north and 600 feet to the south to improve sight distance related to vertical curvature. (See Appendix H.20)

MARLOW ROAD

T-intersection to the east (unpaved) on curved section of Williamson Valley Road. No stakeholder input. New guardrail is visible on curve south of Marlow Road in January 2014 aerial photo along east side of the intersection along with a paved shoulder. The guardrail does not exist in the May 2012 aerial photograph.

PROJECTS TO EVALUATE: None

WHISPERING CANYON DRIVE

T-intersection to the west. Existing 175-foot northbound left-turn lane. Separate eastbound right- and left-turn lanes.

- Sight distance concerns were expressed for the south leg due to vertical curvature (stakeholder input); however, the sight distance field review confirmed that adequate sight distance is provided for 55 mph speeds.
- Northbound left-turn lane meets ADOT warrant by 2040, but length is less than ADOT length (205 feet).

PROJECT TO EVALUATE:

- **SHORT-TERM IMPROVEMENT:** Consider installing a northbound advance intersection warning sign and supplemental distance panel on Williamson Valley Road

ALMOSTA RANCH ROAD/WEST ROAD 2 SOUTH

Four-leg intersection, but east leg is unpaved and appears to be a private street. Existing northbound 200-foot left-turn lane. Located on the north end of a horizontal curve. 12-hour count completed and signal warrant analysis conducted (not warranted).

- Northbound left-turn lane meets ADOT warrant by 2040, and meets the ADOT length criteria
- Pavement exists to provide a northbound right-turn lane.
- Sight distance concerns were expressed for the south leg due to vertical curvature (stakeholder input); however, the sight distance field review confirmed that adequate sight distance is provided for 55 mph speeds.

PROJECT TO EVALUATE:

- **SHORT-TERM IMPROVEMENT:** Consider restriping to provide a short northbound right-turn lane using existing pavement.

INSCRIPTION CANYON DR

T-intersection to the west. Existing northbound 200-foot left-turn lane. No stakeholder input.

- Northbound left-turn lane meets ADOT warrant by 2040, and length is approximately equal to ADOT length criteria (205 feet).

PROJECTS TO EVALUATE: None

NANCY DRIVE

Offset intersection, separated by 140 feet (not an interlocking left-turn condition). Consider possible realignment of east leg to align with west leg. The west leg is of minor importance. 24-hour count completed and signal warrant analysis conducted (not warranted). This is a possible location for proposed east/west connector road between Williamson Valley Road and Chino Valley.

- Sight distance issues on east leg due to vertical curvature on north leg based on sight distance review.
- Likely requires northbound to eastbound right-turn lane. Retain existing east leg for possible parking/access to trailhead – Stakeholder input
- 1 northbound crash (5/23/14 at 11:30 p.m.) that may have been addressed by a right-turn lane.

PROJECTS TO EVALUATE: None

WILLIAMSON VALLEY ROAD CORRIDOR

50 mph speed limit, with Bicycle SHARE THE ROAD warning signs and no shoulders in most areas. The lack of paved shoulders is consistent with many Yavapai County roads. There appears to be a "goat path" along sections of the corridor for pedestrians and ATVs, particularly along the west side from Buchanan Drive to Cielo Grande.

- 46 nighttime crashes occurred along the corridor, with 11 occurring at Pioneer Pkwy, 4 at Bard Ranch Road, and 3 at Marlow Road. Five intersections experienced 2 nighttime crashes and 14 intersections experienced 1 nighttime crash. Seven nighttime crashes occurred on midblock segments.
- 1 southbound bicyclist crash and 1 northbound bicyclist crash occurred along the corridor. Both were same-direction sideswipe collisions.
- 41% of all crashes are wildlife-related.
- At least four school bus stops exist along corridor (based on a review of School Bus Stop warning sign placement).
- Delineator posts installed along the entire corridor recently and provides good motorist alignment.

PROJECTS TO EVALUATE:

- **SHORT-TERM IMPROVEMENTS:**
  - Further remove bushes/trees along corridor ROW to improve sightlines to wildlife and at intersections/driveways along corridor.
  - Consider providing speed feedback signs at select locations along the corridor where speeding is most prevalent.
  - Implement speed enforcement programs along the corridor.

Summary of Capital Improvement Projects for Evaluation

A. Realign Buena Vista Trail (west leg) approximately 95 feet to the north to align with Longview Drive (east leg) realigned about 95 feet to the south, and provide 205-foot northbound and southbound left-turn lanes. Reconstruct Williamson Valley Road south of Buena Vista Trail for approximately 1,040 feet to improve sight distance related to vertical curvature.

B. Provide a TWLTL from 300 feet north of Longview Drive to 300 feet south of Buena Vista Trail with no realignment of either leg. Reconstruct Williamson Valley Road south of Buena Vista Trail for approximately 930 feet to improve sight distance related to vertical curvature

C. Realign Pemberton Drive (west leg) to align with Cliff Rose Road (east leg) and provide 205-foot north/south left-turn lanes. Reconstruct Williamson Valley Road south of Pemberton Drive for approximately 720 feet to improve sight distance related to vertical curvature. Cut back the embankment and vegetation on the west side of Williamson Valley Road.

D. Provide a center TWLTL from 300 feet north of McIntosh Drive to 300 feet south of Merrill Drive (1,547-foot TWLTL) and extend the northbound right-turn lane at Merrill Drive and McIntosh Drive to 205 feet.

E. Realign Oneal Road to provide an improved 90-degree angle to Williamson Valley Road, and provide a center TWLTL from 400 feet north of Oneal Road to 300 feet south of Kelly Drive (1,310-foot TWLTL). Extend northbound 55-foot right-turn lane at Kelly Drive to 205 feet, and extend northbound 90-foot right-turn lane at Oneal Road to 205 feet. Reconstruct Williamson Valley Road north of Kelly Drive for approximately 830 feet to improve sight distance related to vertical curvature.

F. Close Silver Juniper Ranch Road at Williamson Valley Road. Extend west-side frontage road to Silver Juniper Ranch Road (100 feet). Realign west side frontage road opening 100 feet to the north to align with Lariat Lane. Provide a center TWLTL from Mendiburo Way to 300 feet south of Lariat Lane (1,060 foot TWLTL). Extend northbound right-turn lane to 205 feet at Lariat Lane.

G. Close Rainmaker on west side and create a new frontage opening in alignment with Single Tree Street and provide a center 1,040-foot TWLTL from Love Lane to 300 feet south of Single Tree Street. Extend northbound 100-foot right-turn lane at Single Tree Street to 205 feet.

H. Reconstruct Williamson Valley Road north of Granite Park Drive for approximately 810 feet to improve sight distance related to vertical curvature.

I. Extend northbound 70-foot right-turn lane at Glenshandra Drive to 205 feet.

J. Provide a center TWLTL from 300 feet north of Granite Oaks Drive/trail access to 300 feet south of Granite Oaks Drive/trail access.

K. Provide 205-foot southbound left-turn lane at Bard Ranch Road and extend northbound right-turn lane to 205 feet.

L. Provide 205-foot northbound left-turn lane at Buchanan Drive.

M. Provide 205-foot southbound left-turn lane at Blackjack Ridge Road and 205-foot northbound right-turn lane.

N. Extend northbound 80-foot left-turn lane to 205 feet at American Ranch Road.

O. Provide 205-foot northbound and 280-foot southbound left-turn lanes at Outer Loop Road and convert northbound right-turn lane to an offset-right turn lane. Pave the west leg up to the ROW line.

P. Provide traffic signal at Outer Loop Road along with 205-foot northbound and 280-foot southbound left-turn lane (no need for offset-right-turn lane with traffic signal) as well as street lighting. Pave approximately 100-feet on west leg and provide east/west left turn lanes.

Q. Provide modern roundabout with central/splitter islands and lighting at Outer Loop Road. Include paving of the west leg to the roundabout.

R. Provide 205-foot northbound left-turn lane at Sharps Road.

S. Provide 205-foot northbound and southbound left-turn lanes at Stazenski Road/Williamson Valley Ranch Road. Extend northbound right-turn lane at Williamson Valley Ranch Road by 40 feet.

T. Provide 205-foot northbound left-turn lane at Cielo Grande, and modify the side-slope along the east shoulder to improve sight distance at Dome Road. Reconstruct Williamson Valley Road south of Dome Road for approximately 250 feet to the north and 600 feet to the south to improve sight distance related to vertical curvature.

IMPROVEMENT PRIORITIZATION

A prioritization matrix was developed to rank the design alternatives based on improvement characteristics. The following inputs are considered in the prioritization matrix:

- Safety
- Public Input
- Pavement Condition
- Traffic Counts
- Potential Level-of-Service Improvement
- Cost

All inputs are on a five-point scale, with 1 indicating a low priority, and 5 indicating the highest priority.

Safety

The safety input includes four factors; the quantity of related crashes that may be addressed by the improvement, the potential of intersection sight distance to be improved, the installation (or extension) of a turn lane warranted by 2040 (or earlier), and the priority of turn-lane installation based on the year in which it is warranted.

Five years of crash data was evaluated, from 2011 to 2015. If a crash may have been prevented by the design alternative, it is counted towards the crash score. In considering the historical crashes related to each alternative, the quantity ranged from zero crashes to two crashes per alternative. The crash score is determined using the following scale: zero crashes: 1, one crash: 3, and two crashes: 5.

In terms of intersection sight distance, all alternatives that meet sight distance requirements at a 55 mph design speed were given an ISD score of 1. Alternatives with intersections that did not meet requirements for the 55 mph design speed were evaluated in terms of potential sight distance improvement associated with the alternative. If the alternative is not anticipated to improve intersection sight distance, it is given a score of 1. If the improvement is somewhat likely or very likely to improve sight distance, it is given a score of 3 and 5, respectively. For example, Alternative A (Buena Vista Trail and Longview Drive Realignment), was given an ISD score of 5, due to the improved sight distance of Buena Vista Trail looking southbound.

A score for adding a right or left-turn lane is also included in the safety rating, which indicates whether a warranted turn lane is implemented (or extended to meet ADOT length criteria). If the alternative includes the installation of a new and warranted turn lane, the alternative receives a turn lane score of 5. If a warranted turn lane is extended to meet the ADOT length, it is given a score of 3. If the alternative does not involve turn lane improvements, it is given a score of 1.

The warrant priority score gives a higher score (5) to alternatives with turn-lane improvements that are warranted in the near-term (2016 or 2025), and a lower score to turn lanes warranted in the long-term (2040).

The crash score, ISD score, turn-lane score, and the warrant-priority score were weighted equally in the calculation of the overall safety score.

Public Input

Public input was provided to the study team from Yavapai County staff based on agency observation or from prior public meetings or other means of input. If public comments are directly related to a design element in an alternative, such as a turn-lane or realigned intersection approach, the alternative was given a public input score of 5. If public input was not provided, the alternative is given a score of 1.

Pavement Condition

The pavement condition data provided by Yavapai County is documented in terms of OCI, or Overall Condition Index. Williamson Valley Road is in very good condition, with OCI scores of 92 to 95. To derive meaningful pavement condition variation between alternatives, the OCI of the cross-street was also evaluated, with values ranging from 44 to 87. The pavement condition score of an alternative is calculated using a combination of both the Williamson Valley Road OCI and cross-street OCI. The score uses a weighting factor of 0.7 for the cross-street and 0.3 for Williamson Valley Road.

Traffic Counts

The traffic count score included the peak hour volume, which is the summation of all vehicles passing through the intersection within the greatest one-hour period during data collection. The peak-hour volume occurred during the AM peak period for all study intersections. The traffic score also included the side-street traffic during the AM and PM peak period. These vehicles were counted if they were turning from Williamson Valley Road onto the side-street, or if the vehicles were on the side-street turning onto Williamson Valley Road. The traffic volumes were added together, and based on the range of resulting totals, the alternatives were given a relative score from “1” to “5”, with “5” having the highest traffic count volumes.

Potential Level-of-Service (LOS) Improvement

The potential LOS improvement score evaluates the likelihood of LOS improvement for minor street approaches with a turning movement of LOS D, E, or F. If the approaches have a LOS of C or better, they are given a score of 1. If the improvement includes a design element that will improve minor street LOS, such as a TWLTL, traffic signal, or roundabout, the alternative is given a score of 5. If the alternative is not anticipated to improve minor street level-of-service, it is given a score of 1.

Cost

The cost score was determined using a preliminary cost estimate of each alternative. The following construction items were included in the estimates: pavement removal (CY), installation of asphaltic concrete (SY), earthwork cut and fill costs due to roadway realignment (CY), roadway reconstruction to improve sight distance (CY), tree removal (EA), headwall construction (EA), drainage pipe installation/extension (LF), guardrail relocation (LF), signal installation (EA), roundabout installation (EA), and pavement markings (LF, EA). Right-of-way acquisition costs, other drainage costs, and utility relocation costs were not included in the preliminary cost estimates. The cost estimates are planning-level and will require further design and scoping of the alternative to refine the quantities and construction items prior to construction. Further detailed survey work is required for the final design of roadway realignment and reconstruction, as well as modification to the existing embankments for those projects that are intended to address sight distance issues. The goal in developing the preliminary cost estimates

was to compare the relative costs of implementing each alternative. The lowest cost scores were given a score of 5, and the highest costs projects were given a score of 1.

To obtain accurate costs for a modern roundabout at Outer Loop Road, 30% design plans are required, which is beyond the scope of this project. However, the projected cost for a single-lane roundabout in a rural area would typically be in the range of $1 to $1.5 million. A two-lane roundabout is expected to cost in the order of $2 million. Once these designs are complete, the amount of ROW and drainage work needed to build either type of roundabout could be calculated. It is important to note that based on the projected volume in 2040, a single-lane roundabout would operate at a LOS B during the highest peak hour. A modern roundabout would also institute a speed reduction element into the corridor for all vehicles entering the roundabout. These costs do not include consideration for maintenance/operation.

The preliminary planning-level cost estimate of each project is provided in **Appendix I**.

Incorporating Evaluation Criteria and Weighting Factors into the Prioritization Matrix

Based on the perceived relative importance of the six input factors and discussions with Yavapai County, the following weighting system was developed: Safety (3), Public Input (1), Pavement Condition (1), Traffic Counts (2), Potential LOS Improvement (1), and Cost (0). The prioritization matrix and weighting system is shown in Table 16.

Table 16: Prioritization Matrix

Prioritization Matrix									
			Weight>>	3	1	1	2	1	0
Alt #	Segment/Intersection	Overall Score		Safety	Public Input	Pavement Condition	Traffic Counts	Potential LOS Improvement	Cost
Q	Outer Loop Road (Roundabout)	4.6	★★★★½	5	5	3	5	5	1
B	Buena Vista Trail/Longview Drive (TWLTL)	4.4	★★★★☆	4	5	3	5	5	3
G	Rainmaker/Single Tree Street	4.2	★★★★☆	4	5	4	4	5	4
C	Cliff Rose Road/Pemberton Drive	4.1	★★★★☆	5	5	4	4	1	2
E	Kelly Drive/Stringfield Drive/Oneal Road	4.1	★★★★☆	4	5	4	4	5	3
P	Outer Loop Road (Traffic Signal)	4.1	★★★★☆	4	5	3	5	4	2
A	Buena Vista Trail/Longview Drive (Realignment)	3.9	★★★½☆	4	5	3	5	1	1
O	Outer Loop Road (Unsignalized)	3.5	★★★½☆	3	5	3	5	1	4
F	Silver Juniper Ranch Road/Lariat Lane/Levie Lane	3.1	★★★☆☆	1	5	4	4	5	4
M	Blackjack Ridge Road	3.0	★★★☆☆	3	5	3	3	1	4
D	McIntosh Drive to Merrill Drive	2.9	★★½☆☆	2	1	3	4	5	4
J	Granite Oaks Drive/Trailhead	2.6	★★½☆☆	1	5	2	3	5	4
L	Buchanan Drive	2.5	★★½☆☆	2	5	2	3	1	5
I	Glenshandra Drive	2.5	★★☆☆☆	2	1	3	4	1	5
T	Cielo Grande/Dome Road	2.4	★★☆☆☆	4	1	3	2	1	3
S	Stazenski Road/Williamson Valley Ranch Road	2.4	★★☆☆☆	3	1	2	3	1	4
K	Bard Ranch Road	2.3	★★☆☆☆	2	5	2	3	1	4
H	Granite Park Drive (ISD Improvements Only)	2.3	★★☆☆☆	2	1	2	4	1	4
R	Sharps Road	2.2	★★☆☆☆	3	1	4	2	1	5
N	American Ranch Road	2.0	★★☆☆☆	2	1	3	3	1	5

The prioritization matrix was originally developed to include cost, however, the current weighting system ranks the improvement projects without the influence of cost. The objective was to evaluate projects based on safety/ need first, and then program the corridor improvement schedule in terms of cost with respect to budget availability.

Short-Term, Mid-Term and Long-Term Schedule for Improvements

The ultimate goal for the improvement plans along Williamson Valley Road is to develop a schedule of improvements as well as selecting the improvements that would result in the highest benefit along the corridor, for both safety and to accommodate the traffic generated. A number of short-term improvement projects were identified as part of this study that can be investigated for implementation by Yavapai County for near-term installation.

Twenty capital-improvement projects were also developed for consideration and possible installation. Of the 20 capital projects, some are mutually exclusive. Multiple projects were prepared for consideration at the following two locations, some having a wider impact to the community. Those locations include:

- Buena Vista Trail/Longview Drive (two alternatives projects proposed; one realigns both side streets to a common intersection to provide dedicated left-turn lanes, and the other retains the existing side-street alignments along with a central two-way left-turn lane.)

- Outer Loop Road (three alternative projects proposed; left turn lanes with no traffic signal, left-turn lanes with a traffic signal, and a modern roundabout.) If the project to build a traffic signal or roundabout is selected for improving the intersection, the other two projects will be eliminated from further consideration. After careful study, the modern roundabout is recommended for the Outer Loop road intersection based on the following factors:

  i. The intersection meets 70% signal warrants in 2025 and 100% signal warrants in 2040. Improvements to serve the intersection can just as easily be provided with a modern roundabout.

  ii. The isolated intersection location will make it difficult to monitor and maintain a traffic signal. Yavapai County only has two other traffic signals within their jurisdiction, and they are near the City of Prescott border.

  iii. The roundabout design is expected to have fewer rear-end crashes, fewer conflict points, less severe crash types, and a lower life-cycle cost compared to a traffic signal.

  iv. A modern roundabout will introduce a speed reduction effect for all approach vehicles without creating undue delays. Evaluation of projected volumes indicates that a single-lane roundabout will operate with a high level of service under 2040 projected traffic volumes.

  The modern roundabout is recommended for near-term programming and implementation as it has the greatest benefit and lower future maintenance and operation costs while providing a good level of service. Interim improvement efforts (e.g., installation of left-turn lanes) are not recommended as they increase the overall cost and that cost will be not be recovered during the construction of the ultimate improvement (roundabout).

Thus in essence, while 20 capital projects were developed and evaluated, there are in actuality 17 total projects that can be considered for implementation along the Williamson Valley study corridor that are identified in this study.

Cost will play a role in developing a capital improvement program for the Williamson Valley Road corridor as the County will have a limited annual budget for improvements along the corridor. The total cost of the capital improvement projects will be based on the projects selected for implementation. Furthermore, since not all cost elements were considered (i.e. drainage, utilities), the costs will likely increase. Projects with the highest scores in the prioritization matrix are the highest priority projects and should be considered for near-term implementation (depending on the budget availability). Near-term projects are those that should be designed and constructed in the next 3 to 7 years. The preliminary cost estimates of these three projects total to approximately $1,947,393. The highest priority locations for short term implementation are listed below.

1. Outer Loop Road (Modern Roundabout) – Alternative Q
2. Buena Vista Trail/Longview Drive (TWLTL with no realignment) – Alternative B
3. Rainmaker/Single Tree Street – Alternative G

Mid-term projects are those that are located in the middle of the prioritization table (after excluding the mutually exclusive projects), and would be programmed for design and construction in the next 7 to 14 years (budget permitting). The six mid-term projects are listed below. The preliminary cost estimates of the mid-term projects total to approximately $973,367.

4. Cliff Rose Road/Pemberton Drive – Alternative C
5. Kelly Drive/Stringfield Drive/Oneal Road – Alternative E
6. Silver Juniper Ranch Road/Lariat Lane/Levie Lane - Alternative F
7. Blackjack Ridge Road - Alternative M
8. McIntosh Drive to Merrill Drive - Alternative D
9. Granite Oaks Drive/Trailhead - Alternative J

The longer-term capital improvement projects are those that would have the lowest priority for implementation and would be designed and implemented at the end of the planning horizon for the study corridor (15 years or longer). The eight long-term projects have a combined estimated cost of approximately $563,944, and include the following locations:

10. Buchanan Drive - Alternative L
11. Glenshandra Drive - Alternative I
12. Cielo Grande/Dome Road – Alternative T
13. Stazenski Road/Williamson Valley Ranch Road – Alternative S
14. Bard Ranch Road – Alternative K
15. Granite Park Drive – Alternative H
16. Sharps Road – Alternative R
17. American Ranch Road – Alternative N

The projects listed in the short-term, mid-term, and long-term planning horizons have an estimated total of $3,484,704. The preliminary ranking of short-term, mid-term and long-term would be further refined based on budget availability for the corridor. The higher cost projects were ranked as the having the

highest priority, and because of this and budget availability, some of the higher cost projects may be moved down to the mid-term priority and some of the mid-term projects may be moved to the long-term priority for consideration. It is also likely that some of the long-term projects may not be funded.

Yavapai County should look to economize project construction cost whenever possible. Grouping projects to bid and construct will typically offer some economies of scale advantages to the County. A potential strategy for grouping projects could be represented in five phases, with the Outer Loop Road Roundabout Project programmed for Phase I. Due to the high priority, safety benefit, construction effort, and high cost, this project is not grouped with other improvement efforts. All other projects are recommended to be grouped based on spatial proximity, beginning with the southern sections because they have a greater overall priority rank. The phases and estimated costs are as follows:

- **Phase I:** Outer Loop Road Roundabout Project (Alternative Q; $ 1,611,942)
- **Phase II:** Improvements to Buena Vista Trail/Longview Drive and Pemberton Drive/Cliff Rose Road (Alternatives B and C; $529,396)
- **Phase III:** Improvements to McIntosh Drive/Merrill Drive, Kelly Drive/Stringfield Drive/Oneal Road, Silver Juniper Ranch Road/Lariat Lane/Levie Lane, and Rainmaker/Single Tree (Alternatives D, E, F, G; $665,396)
- **Phase IV:** Improvements to Granite Park Drive, Glenshandra Drive, Granite Oaks Drive, Bard Ranch Road, and Buchanan (Alternatives H, I, J, K, L; $296,237)
- **Phase V:** Improvements to Blackjack Ridge Road, American Ranch Road, Sharps Road, Stazenski Road, and Cielo Grande/Dome Road (Alternatives M, N, R, S, T; $381,734)

Additionally, there are future plans to build an east/west connector between Williamson Valley Road and Chino Valley, north of the study area. If the Northern Connector project is funded within the study planning horizon, other improvement projects to Williamson Valley Road may be performed in conjunction with the Northern Connector construction to provide an economy of scale reduction in costs.

APPENDIX A – RAW TRAFFIC VOLUME COUNTS

TRAFFIC RESEARCH & ANALYSIS, INC.
Specializing in Traffic Data Collection

Traffic Research & Analysis, Inc.
3844 East Indian School Road
Phoenix, AZ 85018
(602) 840-1500

Intersection TMC: 1602957
Count Date: 4/7/2016

N WILLIAMSON VALLEY RD & PIONEER PKWY

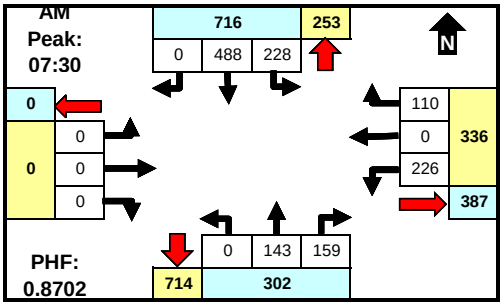

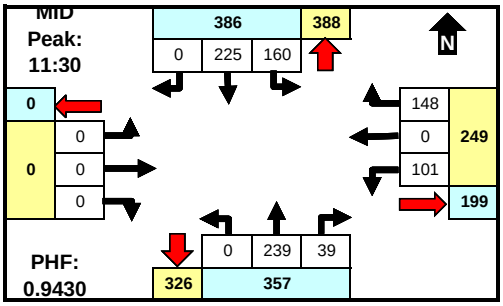

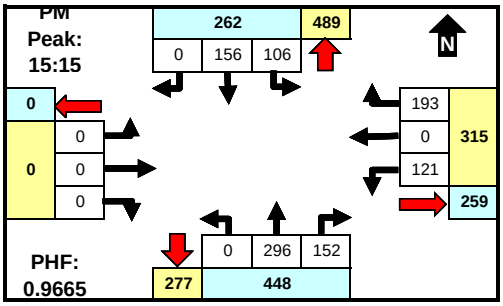

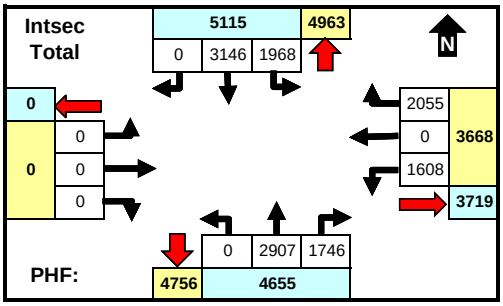

	From North				From East				From South				From West				INTSEC
	N WILLIAMSON VALLEY				PIONEER PKWY				N WILLIAMSON VALLEY				PIONEER PKWY				
Time	LT	Thru	RT	U	LT	Thru	RT	U	LT	Thru	RT	U	LT	Thru	RT	U	TOTAL
00:00	0	0	0	0	0	0	1	0	0	0	0	0	0	0	0	0	1
00:15	1	2	0	0	1	0	2	0	0	3	1	0	0	0	0	0	10
00:30	0	1	0	0	1	0	0	0	0	1	2	0	0	0	0	0	5
00:45	1	0	0	0	1	0	3	0	0	0	1	0	0	0	0	0	6
01:00	1	1	0	0	0	0	4	0	0	0	0	0	0	0	0	0	6
01:15	1	0	0	0	1	0	1	0	0	1	0	0	0	0	0	0	4
01:30	0	0	0	0	0	0	2	0	0	2	1	0	0	0	0	0	5
01:45	0	0	0	0	0	0	0	0	0	0	0	0	0	0	0	0	0
02:00	0	0	0	0	1	0	2	0	0	0	0	0	0	0	0	0	3
02:15	0	0	0	0	0	0	0	0	0	0	1	0	0	0	0	0	1
02:30	1	0	0	0	1	0	1	0	0	2	1	0	0	0	0	0	6
02:45	0	0	0	0	0	0	1	0	0	0	1	0	0	0	0	0	2
03:00	0	0	0	0	1	0	1	0	0	2	0	0	0	0	0	0	4
03:15	0	0	0	0	1	0	0	0	0	0	3	0	0	0	0	0	4
03:30	2	2	0	0	0	0	0	0	0	0	2	0	0	0	0	0	6
03:45	0	1	0	0	1	0	0	0	0	0	0	0	0	0	0	0	2
04:00	1	1	0	0	2	0	0	0	0	0	1	0	0	0	0	0	5
04:15	4	2	0	0	3	0	0	0	0	0	2	0	0	0	0	0	11
04:30	6	4	0	0	2	0	3	0	0	0	2	0	0	0	0	0	17
04:45	3	2	0	0	9	0	0	0	0	3	1	0	0	0	0	0	18
05:00	7	4	0	0	4	0	2	0	0	7	5	0	0	0	0	0	29
05:15	13	6	0	0	3	0	0	0	0	1	9	0	0	0	0	0	32
05:30	11	21	0	0	7	0	6	0	0	4	14	0	0	0	0	0	63
05:45	13	19	0	0	5	0	3	0	0	4	10	0	0	0	0	0	54
06:00	14	23	0	0	8	0	4	0	0	7	12	0	0	0	0	0	68
06:15	36	36	0	0	18	0	10	0	0	10	9	0	0	0	0	0	119
06:30	41	75	0	0	27	0	11	0	0	16	33	0	0	0	0	0	203
06:45	34	71	0	0	22	0	13	0	0	19	22	0	0	0	0	0	181
07:00	38	58	0	0	29	0	16	0	0	20	38	0	0	0	0	0	199
07:15	52	100	0	0	41	0	20	0	0	28	28	0	0	0	0	0	269
07:30	69	175	0	0	62	0	22	0	0	30	31	0	0	0	0	0	389
07:45	67	119	0	0	66	0	28	0	0	29	45	0	0	0	0	0	354
08:00	33	120	0	0	47	0	29	0	0	33	34	0	0	0	0	0	296
08:15	59	74	0	0	51	0	31	0	0	51	49	0	0	0	0	0	315
08:30	44	61	0	0	30	0	42	0	0	32	37	0	0	0	0	0	246
08:45	32	70	0	0	30	0	27	0	0	27	28	0	0	0	0	0	214
09:00	39	60	0	0	28	0	22	0	0	34	25	0	0	0	0	0	208
09:15	47	76	0	0	22	0	24	0	0	42	26	0	0	0	0	0	237
09:30	53	85	0	0	26	0	30	0	0	38	29	0	0	0	0	0	261
09:45	40	71	0	0	23	0	45	0	0	38	31	0	0	0	0	0	248
10:00	40	81	0	0	19	0	25	0	0	43	27	0	0	0	0	0	235
10:15	47	52	0	0	20	0	32	0	0	45	37	0	0	0	0	0	233
10:30	43	65	0	0	23	0	30	0	0	50	33	0	0	0	0	0	244
10:45	50	82	0	0	24	0	27	0	0	36	38	0	0	0	0	0	257
11:00	28	51	0	0	13	0	32	0	0	49	29	0	0	0	0	0	202
11:15	38	56	0	0	25	0	30	0	0	53	33	0	0	0	0	0	235
11:30	45	63	0	0	23	0	37	0	0	60	35	0	0	0	0	0	263
11:45	36	65	0	1	23	0	37	0	0	52	32	0	0	0	0	0	246
12:00	38	53	0	0	26	0	35	0	0	57	31	0	0	0	0	0	240
12:15	41	44	0	0	29	0	39	0	0	70	20	0	0	0	0	0	243
12:30	28	56	0	0	18	0	37	0	0	52	26	1	0	0	0	0	218
12:45	37	60	0	0	36	0	36	0	0	59	22	1	0	0	0	0	251
13:00	22	56	0	0	20	0	39	1	0	37	21	0	0	0	0	0	196
13:15	28	62	0	0	23	0	48	0	0	54	26	0	0	0	0	0	241
13:30	30	49	0	0	19	0	37	0	0	50	36	0	0	0	0	0	221
13:45	26	44	0	0	18	0	45	0	0	54	29	0	0	0	0	0	216
14:00	26	41	0	0	26	0	49	0	0	46	41	0	0	0	0	0	229
14:15	22	55	0	0	39	0	39	0	0	45	22	0	0	0	0	0	222
14:30	41	38	0	0	37	0	34	1	0	54	28	0	0	0	0	0	233
14:45	42	60	0	0	30	0	37	0	0	62	40	0	0	0	0	0	271
15:00	28	38	0	0	20	0	45	0	0	46	24	0	0	0	0	0	201
15:15	46	35	0	0	38	0	40	0	0	59	51	0	0	0	0	0	269
15:30	21	33	0	0	33	0	48	0	0	77	46	0	0	0	0	0	258
15:45	41	51	0	0	23	0	55	1	0	52	28	0	0	0	0	0	251
16:00	29	38	0	0	31	0	56	0	0	69	39	0	0	0	0	0	262
16:15	28	36	0	0	31	0	49	0	0	71	41	0	0	0	0	0	256
16:30	23	46	0	0	28	0	49	0	0	73	37	0	0	0	0	0	256
16:45	24	37	0	0	35	0	48	0	0	65	33	0	0	0	0	0	242
17:00	31	37	0	0	27	0	47	1	0	87	41	0	0	0	0	0	271
17:15	32	32	0	0	19	0	49	0	0	82	42	0	0	0	0	0	256
17:30	26	45	0	0	30	0	39	0	0	65	24	0	0	0	0	0	229
17:45	19	38	0	0	15	0	33	1	0	69	22	0	0	0	0	0	197
18:00	23	35	0	0	18	0	26	0	0	66	23	0	0	0	0	0	191
18:15	18	22	0	0	17	0	33	0	0	52	20	0	0	0	0	0	162
18:30	15	16	0	0	12	0	27	0	0	44	18	0	0	0	0	0	132
18:45	13	10	0	0	16	0	26	0	0	40	12	0	0	0	0	0	117
19:00	12	10	0	0	18	0	29	0	0	53	21	0	0	0	0	0	143
19:15	5	10	0	0	19	0	33	0	0	38	8	0	0	0	0	0	113
19:30	4	14	0	0	15	0	13	0	0	35	12	0	0	0	0	0	93
19:45	5	7	0	0	8	0	26	0	0	35	6	0	0	0	0	0	87
20:00	9	13	0	0	13	0	29	0	0	31	9	0	0	0	0	0	104
20:15	6	9	0	0	11	0	18	0	0	32	5	0	0	0	0	0	81
20:30	3	8	0	0	10	0	19	0	0	25	16	0	0	0	0	0	81
20:45	12	5	0	0	8	0	17	0	0	29	8	0	0	0	0	0	79
21:00	6	8	0	0	13	0	8	0	0	13	2	0	0	0	0	0	50
21:15	2	3	0	0	6	0	13	0	0	16	5	0	0	0	0	0	45
21:30	5	2	0	0	4	0	10	0	0	16	1	0	0	0	0	0	38
21:45	3	8	0	0	6	0	6	0	0	7	1	0	0	0	0	0	31
22:00	5	2	0	0	3	0	6	0	0	7	3	0	0	0	0	0	26
22:15	2	8	0	0	6	0	5	0	0	2	1	0	0	0	0	0	24
22:30	0	2	0	0	1	0	5	0	0	5	0	0	0	0	0	0	13
22:45	0	1	0	0	2	0	3	0	0	7	2	0	0	0	0	0	15
23:00	0	3	0	0	3	0	5	0	0	3	2	0	0	0	0	0	16
23:15	1	4	0	0	2	0	0	0	0	11	3	0	0	0	0	0	21
23:30	0	6	0	0	0	0	4	0	0	5	0	0	0	0	0	0	15
23:45	0	1	0	0	2	0	5	0	0	8	0	0	0	0	0	0	16
Total	1968	3146	0	1	1608	0	2055	5	0	2907	1746	2	0	0	0	0	13438
AM Peak Hr:																	7:30
Pk Vol	228	488	0	0	226	0	110	0	0	143	159	0	0	0	0	0	1354
PHF	1.211	1.434	n/a	n/a	1.168	n/a	1.127	n/a	n/a	1.427	1.233	n/a	n/a	n/a	n/a	n/a	0.870
MID Peak Hr:																	11:30
Pk Vol	160	225	0	1	101	0	148	0	0	239	118	0	0	0	0	0	992
PHF	1.125	1.156	n/a	4.000	1.149	n/a	1.054	n/a	n/a	1.172	1.186	n/a	n/a	n/a	n/a	n/a	0.943
PM Peak Hr:																	15:15
Pk Vol	106	156	0	0	121	0	193	1	0	296	152	0	0	0	0	0	1040
PHF	0.855	0.848	n/a	n/a	0.864	n/a	0.985	0.250	n/a	0.851	0.927	n/a	n/a	n/a	n/a	n/a	0.967

Comments

MID period defined as 10:00 AM - 2:00 PM. Peaks defined based on total intersection volume for all vehicle types.

TRAFFIC RESEARCH & ANALYSIS, INC.
Specializing in Traffic Data Collection

Traffic Research & Analysis, Inc.
3844 East Indian School Road
Phoenix, AZ 85018
(602) 840-1500

Intersection TMC: 1602967
Count Date: 5/18/2016

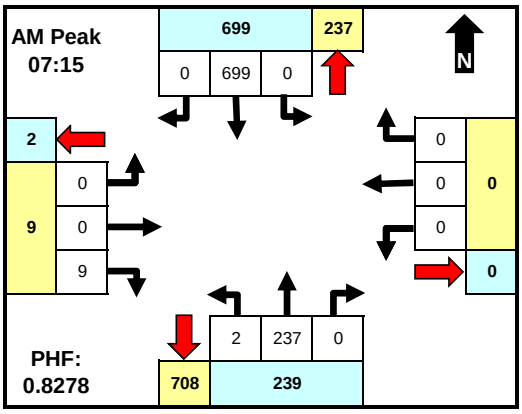

	From North				From East				From South				From West				INTSEC
	WILLIAMSON VALLEY R				BUENA VISTA TRAIL				WILLIAMSON VALLEY R				BUENA VISTA TRAIL				
Time	LT	Thru	RT	Ped	LT	Thru	RT	Ped	LT	Thru	RT	Ped	LT	Thru	RT	Ped	TOTAL
6:00	0	41	0	0	0	0	0	0	1	14	0	0	0	0	2	0	58
6:15	0	65	0	0	0	0	0	0	0	15	0	0	0	0	1	0	81
6:30	0	112	0	0	0	0	0	0	0	34	0	0	0	0	1	0	147
6:45	0	76	0	0	0	0	0	0	0	36	0	0	0	0	2	0	114
7:00	0	96	0	0	0	0	0	0	0	39	0	0	0	0	2	0	137
7:15	0	152	0	0	0	0	0	0	0	47	0	0	0	0	4	0	203
7:30	0	234	0	0	0	0	0	0	0	49	0	0	0	0	3	0	286
7:45	0	181	0	0	0	0	0	0	1	72	0	0	0	0	0	0	254
8:00	0	132	0	0	0	0	0	0	1	69	0	0	0	0	2	0	204
8:15	0	121	0	0	0	0	0	0	1	77	0	0	0	0	2	0	201
8:30	0	112	0	0	0	0	0	0	0	65	0	0	0	0	4	0	181
8:45	0	106	0	0	0	0	0	0	1	60	0	0	0	0	0	0	167
Total	0	1428	0	0	0	0	0	0	5	577	0	0	0	0	23	0	2033
Pk Hr																	7:15 AM
Pk Vol	0	699	0	0	0	0	0	0	2	237	0	0	0	0	9	0	947
PHF	0.000	0.747	0.000	0.000	0.000	0.000	0.000	0.000	0.500	0.823	0.000	0.000	0.000	0.000	0.563	0.000	0.828

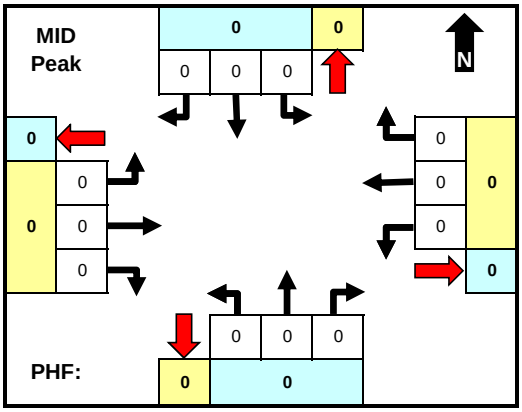

Time	LT	Thru	RT	Ped	LT	Thru	RT	Ped	LT	Thru	RT	Ped	LT	Thru	RT	Ped	TOTAL
Total	0	0	0	0	0	0	0	0	0	0	0	0	0	0	0	0	0
Pk Hr																	
Pk Vol																	
PHF																	

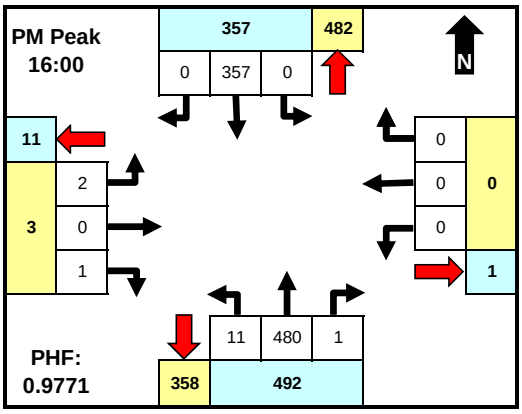

Time	LT	Thru	RT	Ped	LT	Thru	RT	Ped	LT	Thru	RT	Ped	LT	Thru	RT	Ped	TOTAL
15:30	0	78	0	0	0	0	0	0	1	126	0	0	0	0	2	0	207
15:45	0	70	0	0	0	0	0	0	3	106	0	0	0	0	2	0	181
16:00	0	84	0	0	0	0	0	0	2	125	0	0	0	0	1	0	212
16:15	0	110	0	0	0	0	0	0	1	103	0	0	1	0	0	0	215
16:30	0	89	0	0	0	0	0	0	1	127	0	0	1	0	0	0	218
16:45	0	74	0	0	0	0	0	0	7	125	1	0	0	0	0	0	207
17:00	0	72	0	0	0	0	0	0	3	127	0	0	1	0	1	0	204
17:15	0	51	0	0	0	0	0	0	0	135	0	0	1	0	0	0	187
17:30	0	55	0	0	0	0	0	0	1	127	0	0	2	0	1	0	186
17:45	0	47	0	0	0	0	0	0	1	110	0	0	0	0	2	0	160
18:00	0	50	0	0	0	0	0	0	3	81	0	0	0	0	0	0	134
18:15	0	51	1	0	0	0	0	0	2	107	0	0	0	0	0	0	161
Total	0	831	1	0	0	0	0	0	25	1399	1	0	6	0	9	0	2272
Pk Hr																	4:00 PM
Pk Vol	0	357	0	0	0	0	0	0	11	480	1	0	2	0	1	0	852
PHF	0.000	0.811	0.000	0.000	0.000	0.000	0.000	0.000	0.393	0.945	0.250	0.000	0.500	0.000	0.250	0.000	0.977

Intersection Statistics

Per	Peak Hour	Pk Hr Vol	Peak Intvl	Pk Intv Vol	PHF
AM	7:15 AM	947	7:30 AM	286	0.828
MID					
PM	4:00 PM	852	4:30 PM	218	0.977

Peak Hour Statistics by Approach

Per	Peak Hour	Vol	PHF	Peak Hour	Vol	PHF	Peak Hour	Vol	PHF	Peak Hour	Vol	PHF
AM	7:15 AM	699	0.747				7:45 AM	286	0.917	6:45 AM	11	0.688
MID												
PM	4:00 PM	357	0.811				4:30 PM	526	0.974	5:00 PM	8	0.667

Comments

Approach & Departure Volumes (No Peds)

Per	Approach	Depart	Approach	Depart	Approach	Depart	Approach	Depart
AM	1428	577	0	0	582	1451	23	5
MID	0	0	0	0	0	0	0	0
PM	832	1405	0	1	1425	840	15	26

TRAFFIC RESEARCH & ANALYSIS, INC.
Specializing in Traffic Data Collection

Traffic Research & Analysis, Inc.
3844 East Indian School Road
Phoenix, AZ 85018
(602) 840-1500

Intersection TMC: 1602968
Count Date: 4/7/2016

N WILLIAMSON VALLEY RD & LONGVIEW RD

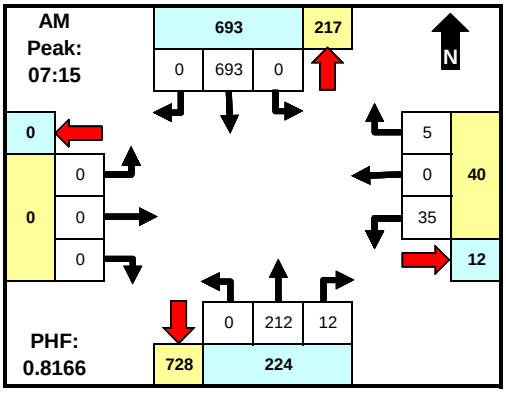

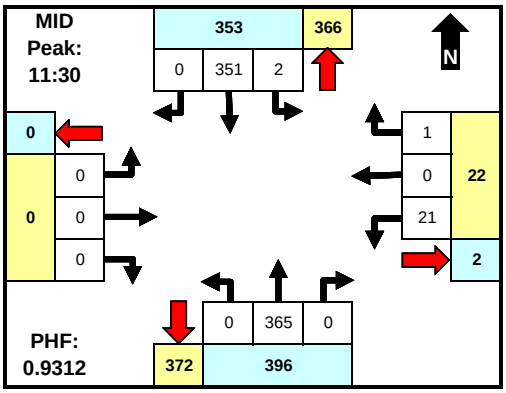

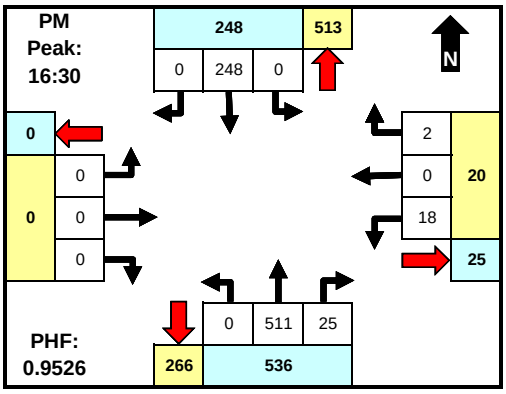

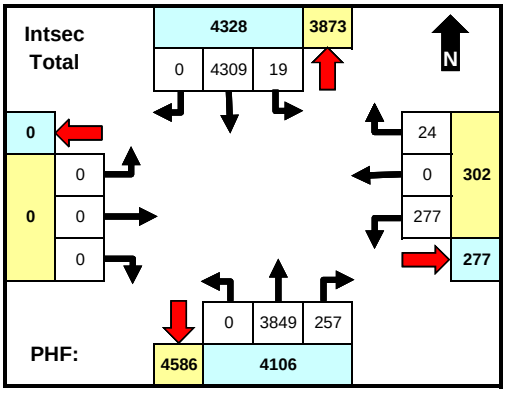

	From North				From East				From South				From West				INTSEC
	N WILLIAMSON VALLEY				LONGVIEW RD				N WILLIAMSON VALLEY				LONGVIEW RD				
Time	LT	Thru	RT	U	LT	Thru	RT	U	LT	Thru	RT	U	LT	Thru	RT	U	TOTAL
06:00	0	44	0	0	2	0	0	0	0	10	1	0	0	0	0	0	57
06:15	0	67	0	0	3	0	0	0	0	16	2	0	0	0	0	0	88
06:30	0	102	0	0	9	0	1	0	0	27	0	0	0	0	0	0	139
06:45	0	85	0	0	6	0	1	0	0	30	0	0	0	0	0	0	122
07:00	0	95	0	0	5	0	0	0	0	35	3	0	0	0	0	0	138
07:15	0	152	0	0	12	0	0	0	0	44	2	0	0	0	0	0	210
07:30	0	225	0	0	10	0	2	0	0	54	2	0	0	0	0	0	293
07:45	0	176	0	0	6	0	1	0	0	57	5	0	0	0	0	0	245
08:00	0	140	0	0	7	0	2	0	0	57	3	0	0	0	0	0	209
08:15	1	112	0	0	1	0	0	0	0	77	8	0	0	0	0	0	199
08:30	1	104	0	0	6	0	0	0	0	69	4	0	0	0	0	0	184
08:45	1	83	0	0	11	0	0	0	0	51	4	0	0	0	0	0	150
09:00	0	109	0	0	4	0	2	0	0	53	1	0	0	0	0	0	169
09:15	0	108	0	0	6	0	0	0	0	66	3	0	0	0	0	0	183
09:30	0	130	0	0	9	0	1	0	0	63	6	0	0	0	0	0	209
09:45	1	96	0	0	9	0	0	0	0	81	4	0	0	0	0	0	191
10:00	2	114	0	0	9	0	0	0	0	64	4	0	0	0	0	0	193
10:15	0	92	0	0	5	0	0	0	0	75	3	0	0	0	0	0	175
10:30	0	111	0	0	13	0	0	0	0	75	5	0	0	0	0	0	204
10:45	2	98	0	0	6	0	2	0	0	56	4	0	0	0	0	0	168
11:00	0	76	0	0	6	0	2	0	0	72	7	0	0	0	0	0	163
11:15	1	84	0	0	6	0	0	0	0	73	6	0	0	0	0	0	170
11:30	0	101	0	0	5	0	1	0	0	95	5	0	0	0	0	0	207
11:45	2	83	0	0	11	0	0	0	0	85	9	0	0	0	0	0	190
12:00	0	87	0	0	2	0	0	0	0	81	7	0	0	0	0	0	177
12:15	0	80	0	0	3	0	0	0	0	104	10	0	0	0	0	0	197
12:30	0	94	0	0	3	0	1	0	0	86	7	0	0	0	0	0	191
12:45	0	87	0	0	8	0	0	0	0	86	9	0	0	0	0	0	190
13:00	0	75	0	0	4	0	0	0	0	88	1	0	0	0	0	0	168
13:15	2	80	0	0	6	0	0	0	0	92	7	0	0	0	0	0	187
13:30	1	75	0	0	6	0	1	0	0	90	7	0	0	0	0	0	180
13:45	0	67	0	0	5	0	0	0	0	93	5	0	0	0	0	0	170
14:00	1	65	0	0	2	0	0	1	0	92	3	0	0	0	0	0	164
14:15	0	77	0	0	3	0	2	0	0	85	9	0	0	0	0	0	176
14:30	0	79	0	0	3	0	0	0	0	85	8	0	0	0	0	0	175
14:45	0	93	0	0	5	0	1	0	0	107	5	0	0	0	0	0	211
15:00	0	70	0	0	5	0	0	0	0	94	4	0	0	0	0	0	173
15:15	1	63	0	0	6	0	1	0	0	94	7	0	0	0	0	0	172
15:30	0	64	0	0	5	0	0	0	0	126	4	0	0	0	0	0	199
15:45	1	66	0	0	9	0	0	0	0	103	12	0	0	0	0	0	191
16:00	0	65	0	0	2	0	1	0	0	116	9	0	0	0	0	0	193
16:15	1	58	0	0	3	0	0	0	0	119	9	0	0	0	0	0	190
16:30	0	70	0	0	7	0	1	0	0	119	9	0	0	0	0	0	206
16:45	0	57	0	0	2	0	1	0	0	122	3	0	0	0	0	0	185
17:00	0	62	0	0	5	0	0	0	0	134	10	0	0	0	0	0	211
17:15	0	59	0	0	4	0	0	0	0	136	3	0	0	0	0	0	202
17:30	0	68	0	0	8	0	0	0	0	105	12	0	0	0	0	0	193
17:45	1	61	0	0	4	0	0	0	0	107	6	0	0	0	0	0	179
18:00																	0
18:15																	0
18:30																	0
18:45																	0
19:00																	0
19:15																	0
19:30																	0
19:45																	0
20:00																	0
20:15																	0
20:30																	0
20:45																	0
21:00																	0
21:15																	0
21:30																	0
21:45																	0
22:00																	0
22:15																	0
22:30																	0
22:45																	0
23:00																	0
23:15																	0
23:30																	0
23:45																	0
Total	19	4309	0	0	277	0	24	1	0	3849	257	0	0	0	0	0	8736
AM Peak Hr:																	7:15
Pk Vol	0	693	0	0	35	0	5	0	0	212	12	0	0	0	0	0	957
PHF	n/a	1.299	n/a	n/a	1.371	n/a	1.600	n/a	n/a	1.075	1.667	n/a	n/a	n/a	n/a	n/a	0.817
MID Peak Hr:																	11:30
Pk Vol	2	351	0	0	21	0	1	0	0	365	31	0	0	0	0	0	771
PHF	4.000	1.151	n/a	n/a	2.095	n/a	4.000	n/a	n/a	1.140	1.290	n/a	n/a	n/a	n/a	n/a	0.931
PM Peak Hr:																	16:30
Pk Vol	0	248	0	0	18	0	2	0	0	511	25	0	0	0	0	0	804
PHF	n/a	1.129	n/a	n/a	1.556	n/a	2.000	n/a	n/a	1.065	1.600	n/a	n/a	n/a	n/a	n/a	0.953

Comments

MID period defined as 10:00 AM - 2:00 PM. Peaks defined based on total intersection volume for all vehicle types.

TRAFFIC RESEARCH & ANALYSIS, INC.
Specializing in Traffic Data Collection

Traffic Research & Analysis, Inc.
3844 East Indian School Road
Phoenix, AZ 85018
(602) 840-1500

Intersection TMC: 1602969
Count Date: 5/18/2016

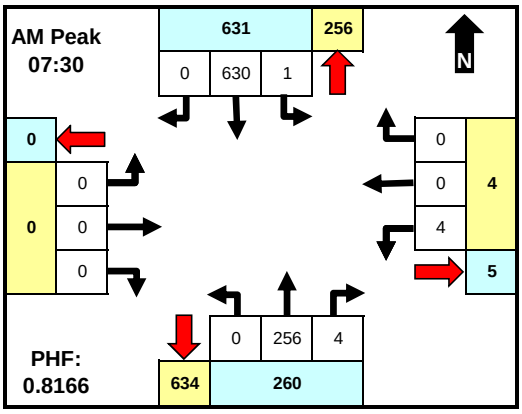

	From North				From East				From South				From West				INTSEC
	WILLIAMSON VALLEY R				RIDGE RD				WILLIAMSON VALLEY R				RIDGE RD				
Time	LT	Thru	RT	Ped	LT	Thru	RT	Ped	LT	Thru	RT	Ped	LT	Thru	RT	Ped	TOTAL
6:00	0	38	0	0	0	0	0	0	0	15	0	0	0	0	0	0	53
6:15	0	56	0	0	0	0	0	0	0	14	0	0	0	0	0	0	70
6:30	0	105	0	0	1	0	0	0	0	33	0	0	0	0	0	0	139
6:45	0	71	0	0	0	0	0	0	0	36	0	0	0	0	0	0	107
7:00	0	97	0	0	1	0	0	0	0	41	0	0	0	0	0	0	139
7:15	0	142	0	0	1	0	0	0	0	39	1	0	0	0	0	0	183
7:30	0	221	0	0	1	0	0	0	0	52	0	0	0	0	0	0	274
7:45	0	173	0	0	1	0	0	0	0	70	0	0	0	0	0	0	244
8:00	0	122	0	0	1	0	0	0	0	63	2	0	0	0	0	0	188
8:15	1	114	0	0	1	0	0	0	0	71	2	0	0	0	0	0	189
8:30	0	110	0	0	0	0	0	0	0	66	0	0	0	0	0	0	176
8:45	0	102	0	0	1	0	0	0	0	54	0	0	0	0	0	0	157
Total	1	1351	0	0	8	0	0	0	0	554	5	0	0	0	0	0	1919
Pk Hr																	7:30 AM
Pk Vol	1	630	0	0	4	0	0	0	0	256	4	0	0	0	0	0	895
PHF	0.250	0.713	0.000	0.000	1.000	0.000	0.000	0.000	0.000	0.901	0.500	0.000	0.000	0.000	0.000	0.000	0.817

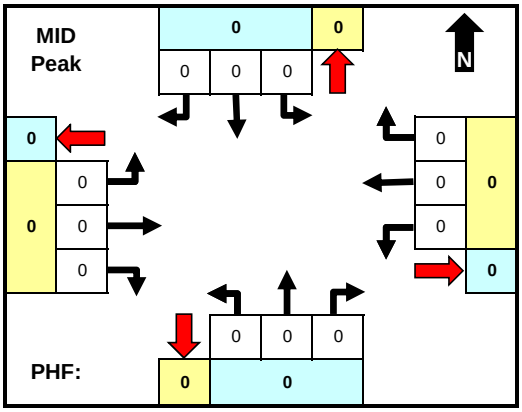

Time	LT	Thru	RT	Ped	LT	Thru	RT	Ped	LT	Thru	RT	Ped	LT	Thru	RT	Ped	TOTAL
Total	0	0	0	0	0	0	0	0	0	0	0	0	0	0	0	0	0
Pk Hr																	
Pk Vol																	
PHF																	

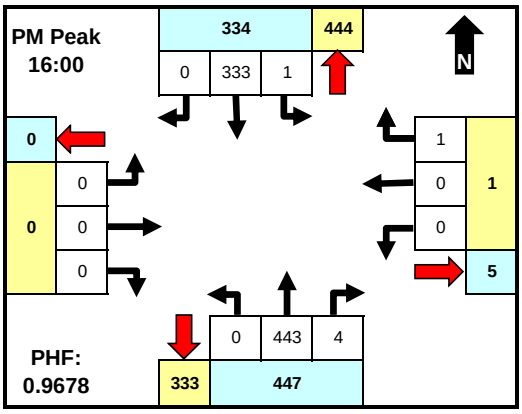

Time	LT	Thru	RT	Ped	LT	Thru	RT	Ped	LT	Thru	RT	Ped	LT	Thru	RT	Ped	TOTAL
15:30	1	72	0	0	0	0	0	0	0	117	1	0	0	0	0	0	191
15:45	0	68	0	0	0	0	0	0	0	100	0	0	0	0	0	0	168
16:00	0	81	0	0	0	0	0	0	0	116	2	0	0	0	0	0	199
16:15	0	101	0	0	0	0	0	0	0	100	1	0	0	0	0	0	202
16:30	1	81	0	0	0	0	1	0	0	110	0	0	0	0	0	0	193
16:45	0	70	0	0	0	0	0	0	0	117	1	0	0	0	0	0	188
17:00	0	70	0	0	0	0	0	0	0	120	0	0	0	0	0	0	190
17:15	0	47	0	0	0	0	0	0	0	127	0	0	0	0	0	0	174
17:30	0	50	0	0	0	0	0	0	0	120	1	0	0	0	0	0	171
17:45	0	44	0	0	1	0	0	0	0	95	1	0	0	0	0	0	141
18:00	0	49	0	0	0	0	0	0	0	84	1	0	0	0	0	0	134
18:15	0	49	0	0	1	0	0	0	0	100	0	0	0	0	0	0	150
Total	2	782	0	0	2	0	1	0	0	1306	8	0	0	0	0	0	2101
Pk Hr																	4:00 PM
Pk Vol	1	333	0	0	0	0	1	0	0	443	4	0	0	0	0	0	782
PHF	0.250	0.824	0.000	0.000	0.000	0.000	0.250	0.000	0.000	0.947	0.500	0.000	0.000	0.000	0.000	0.000	0.968

Intersection Statistics

Per	Peak Hour	Pk Hr Vol	Peak Intvl	Pk Intv Vol	PHF
AM	7:30 AM	895	7:30 AM	274	0.817
MID					
PM	4:00 PM	782	4:15 PM	202	0.968

Peak Hour Statistics by Approach

Per	Peak Hour	Vol	PHF	Peak Hour	Vol	PHF	Peak Hour	Vol	PHF	Peak Hour	Vol	PHF
AM	7:15 AM	658	0.744	7:00 AM	4	1.000	7:45 AM	274	0.938			
MID												
PM	4:00 PM	334	0.827	5:30 PM	2	0.500	4:45 PM	486	0.957			

Comments

Approach & Departure Volumes (No Peds)

Per	Approach	Depart	Approach	Depart	Approach	Depart	Approach	Depart
AM	1352	554	8	6	559	1359	0	0
MID	0	0	0	0	0	0	0	0
PM	784	1307	3	10	1314	784	0	0

TRAFFIC RESEARCH & ANALYSIS, INC.
Specializing in Traffic Data Collection

Traffic Research & Analysis, Inc.
3844 East Indian School Road
Phoenix, AZ 85018
(602) 840-1500

Intersection TMC: 1602958
Count Date: 4/7/2016

N WILLIAMSON VALLEY RD & W CLIFF ROSE RD/W PEMBERTON DR

AM Peak: 07:30

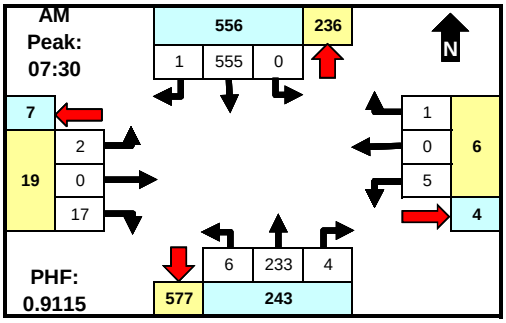

PHF: 0.9115

MID Peak: 11:30

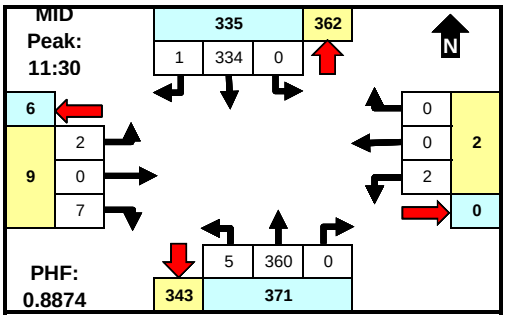

PHF: 0.8874

PM Peak: 16:30

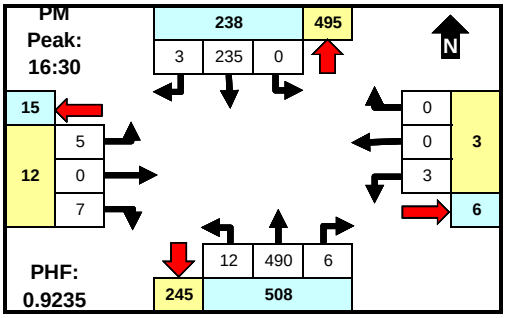

PHF: 0.9235

Intsec Total

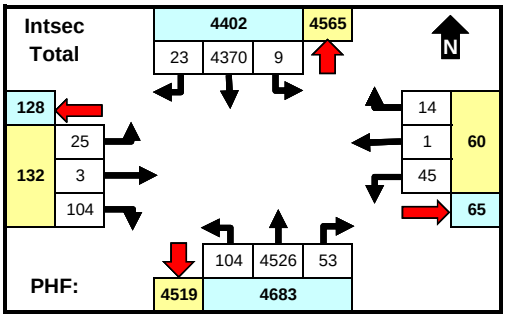

PHF:

Comments

MID period defined as 10:00 AM - 2:00 PM. Peaks defined based on total intersection volume for all vehicle types.

	From North				From East				From South				From West				INTSEC
	N WILLIAMSON VALLEY				W CLIFF ROSE RD				N WILLIAMSON VALLEY				W PEMBERTON DR				
Time	LT	Thru	RT	U	LT	Thru	RT	U	LT	Thru	RT	U	LT	Thru	RT	U	TOTAL
00:00	0	1	0	0	0	0	0	0	0	1	0	0	0	0	0	0	2
00:15	0	1	1	0	0	0	0	0	1	3	0	0	0	0	0	0	6
00:30	0	1	0	0	0	0	0	0	0	1	0	0	0	0	0	0	2
00:45	0	1	0	0	0	0	0	0	0	3	0	0	0	0	0	0	4
01:00	0	2	0	0	0	0	0	0	0	4	0	0	0	0	0	0	6
01:15	0	1	0	0	0	0	0	0	0	3	0	0	0	0	0	0	4
01:30	0	1	0	0	0	0	0	0	0	3	0	0	0	0	0	0	4
01:45	0	0	0	0	0	0	0	0	0	1	0	0	0	0	0	0	1
02:00	0	0	0	0	0	0	0	0	0	2	0	0	0	0	0	0	2
02:15	0	0	0	0	0	0	0	0	0	0	0	0	0	0	0	0	0
02:30	0	1	0	0	0	0	0	0	0	2	0	0	0	0	0	0	3
02:45	0	0	0	0	0	0	0	0	0	2	0	0	0	0	0	0	2
03:00	0	0	0	0	0	0	0	0	0	1	0	0	0	0	0	0	1
03:15	0	1	0	0	0	0	0	0	0	1	0	0	0	0	0	0	2
03:30	0	2	0	0	0	0	0	0	0	0	1	0	1	0	0	0	4
03:45	0	2	0	0	0	0	0	0	0	0	0	0	0	0	0	0	2
04:00	0	2	0	0	0	0	0	0	0	0	0	0	0	3	0	0	5
04:15	0	1	0	0	0	0	0	0	0	0	0	0	0	0	0	0	1
04:30	0	3	0	0	0	0	0	0	0	3	0	0	0	0	0	0	6
04:45	0	2	0	0	0	0	0	0	0	4	0	0	0	0	0	0	6
05:00	0	6	0	0	0	0	0	0	0	8	0	0	0	0	0	0	14
05:15	0	19	0	0	0	0	0	0	0	1	0	0	0	0	0	0	20
05:30	0	34	0	0	0	0	0	0	0	8	0	0	0	0	0	0	42
05:45	0	24	0	0	0	0	0	0	0	9	0	0	0	0	0	0	33
06:00	0	40	0	0	0	0	0	0	0	10	0	0	0	0	1	0	51
06:15	0	61	0	0	1	0	1	0	0	15	0	0	0	0	0	0	78
06:30	0	87	0	0	0	0	0	0	0	27	0	0	0	0	4	0	118
06:45	0	75	0	0	0	0	0	0	0	29	1	0	0	0	1	0	106
07:00	0	86	0	0	0	1	1	0	0	36	1	0	0	0	2	0	127
07:15	0	120	1	0	1	0	0	0	0	41	0	0	1	0	4	0	168
07:30	0	163	0	0	2	0	0	0	1	54	0	0	0	0	6	0	226
07:45	0	159	0	0	1	0	1	0	2	54	0	0	2	0	3	0	222
08:00	0	128	1	0	1	0	0	0	2	53	2	0	0	0	4	0	191
08:15	0	105	0	0	1	0	0	0	1	72	2	0	0	0	4	0	185
08:30	0	97	0	0	1	0	0	0	2	67	0	0	0	0	2	0	169
08:45	0	87	3	0	0	0	0	0	1	50	2	0	0	0	0	0	143
09:00	1	105	0	0	1	0	1	0	1	54	1	0	1	0	2	0	167
09:15	0	98	1	0	3	0	0	0	1	61	1	0	1	0	2	0	168
09:30	1	122	0	0	0	0	2	0	0	65	2	0	1	0	0	0	193
09:45	0	91	0	0	2	0	0	0	3	77	0	0	0	0	2	0	175
10:00	0	103	0	0	6	0	0	0	2	57	1	0	1	0	2	0	172
10:15	0	90	0	0	3	0	0	0	1	75	1	0	1	0	0	0	171
10:30	0	107	1	0	0	0	0	0	4	71	2	0	3	0	2	0	190
10:45	0	91	1	0	2	0	0	0	1	55	1	0	0	0	3	0	154
11:00	0	68	1	0	1	0	2	0	1	66	1	0	0	0	5	0	145
11:15	0	83	0	0	2	0	0	0	1	64	1	0	0	0	0	0	151
11:30	0	98	0	0	0	0	0	0	2	98	2	0	1	0	1	0	202
11:45	0	78	0	0	1	0	0	0	1	79	1	0	0	0	4	0	164
12:00	0	82	0	0	0	0	0	0	1	82	1	0	1	0	1	0	168
12:15	0	76	1	0	1	0	0	0	1	101	2	0	0	0	1	0	183
12:30	1	91	0	0	0	0	1	0	4	85	0	0	0	0	1	0	183
12:45	0	83	1	0	0	0	2	0	0	81	2	0	0	0	1	0	170
13:00	0	75	0	0	2	0	0	0	4	82	0	0	0	0	0	0	163
13:15	0	75	0	0	0	0	0	0	0	88	2	0	0	0	0	0	165
13:30	0	72	0	0	1	0	0	0	3	81	0	0	0	0	2	0	159
13:45	2	66	1	0	0	0	1	0	1	88	0	0	0	0	1	0	160
14:00	0	59	1	0	1	0	0	0	2	90	1	0	1	0	3	0	158
14:15	0	71	0	0	0	0	0	0	3	78	0	0	1	0	0	0	153
14:30	0	78	0	0	0	0	0	0	0	74	1	0	0	0	1	0	154
14:45	0	91	0	0	0	0	0	0	2	98	3	0	0	0	0	0	194
15:00	0	60	1	0	1	0	1	0	2	83	1	0	0	0	1	0	150
15:15	0	65	1	0	2	0	0	0	3	88	0	0	0	0	2	0	161
15:30	0	60	0	0	0	0	0	0	1	118	1	0	1	0	3	0	184
15:45	0	58	0	0	1	0	0	0	1	97	1	0	0	0	3	0	161
16:00	1	69	0	0	0	0	0	0	3	104	0	0	0	0	0	0	177
16:15	0	58	0	0	0	0	0	0	4	107	1	0	1	0	1	0	172
16:30	0	64	2	0	2	0	0	0	5	119	3	0	0	0	2	0	197
16:45	0	58	1	0	1	0	0	0	0	111	2	0	2	0	1	0	176
17:00	0	61	0	0	0	0	0	0	5	138	1	0	0	0	1	0	206
17:15	0	52	0	0	0	0	0	0	2	122	0	0	3	0	3	0	182
17:30	0	64	1	0	1	0	1	0	3	97	0	0	0	0	5	0	172
17:45	0	59	0	0	1	0	0	0	2	102	1	0	2	0	0	0	167
18:00	0	43	0	0	0	0	0	0	1	72	1	0	0	0	3	0	120
18:15	0	37	0	0	1	0	0	0	1	83	0	0	0	0	0	0	122
18:30	0	25	0	0	0	0	0	0	0	60	0	0	0	0	0	0	85
18:45	0	20	0	0	0	0	0	0	0	52	0	0	0	0	0	0	72
19:00	1	18	0	0	0	0	0	0	4	69	3	0	0	0	1	0	96
19:15	0	14	0	0	1	0	0	0	4	65	1	0	0	0	0	0	85
19:30	0	10	0	0	0	0	0	0	1	46	1	0	0	0	2	0	60
19:45	0	9	0	0	0	0	0	0	1	57	0	0	0	0	1	0	68
20:00	0	14	0	0	0	0	0	0	1	56	0	0	0	0	1	0	72
20:15	0	9	0	0	0	0	0	0	4	41	0	0	0	0	0	0	54
20:30	2	7	2	0	0	0	0	0	0	40	0	0	0	0	0	0	51
20:45	0	13	1	0	0	0	0	0	3	34	0	0	0	0	5	0	56
21:00	0	7	0	0	0	0	0	0	0	24	0	0	0	0	2	0	33
21:15	0	4	0	0	0	0	0	0	0	22	1	0	0	0	0	0	27
21:30	0	7	0	0	0	0	0	0	0	25	0	0	0	0	0	0	32
21:45	0	8	0	0	0	0	0	0	1	11	0	0	0	0	0	0	20
22:00	0	5	0	0	0	0	0	0	1	12	0	0	0	0	1	0	19
22:15	0	10	0	0	0	0	0	0	0	7	0	0	0	0	0	0	17
22:30	0	1	0	0	0	0	0	0	0	4	0	0	0	0	1	0	6
22:45	0	1	0	0	0	0	0	0	1	8	0	0	0	0	0	0	10
23:00	0	2	0	0	0	0	0	0	0	5	0	0	0	0	0	0	7
23:15	0	5	0	0	0	0	0	0	0	9	0	0	0	0	0	0	14
23:30	0	5	0	0	0	0	0	0	1	9	0	0	0	0	0	0	15
23:45	0	2	0	0	0	0	0	0	0	11	0	0	0	0	0	0	13
Total	9	4370	23	0	45	1	14	0	104	4526	53	0	25	3	104	0	9277
AM Peak Hr:																	7:30
Pk Vol	0	555	1	0	5	0	1	0	6	233	4	0	2	0	17	0	824
PHF	n/a	1.175	4.000	n/a	1.600	n/a	4.000	n/a	1.333	1.236	2.000	n/a	4.000	n/a	1.412	n/a	0.912
MID Peak Hr:																	11:30
Pk Vol	0	334	1	0	2	0	0	0	5	360	6	0	2	0	7	0	717
PHF	n/a	1.174	4.000	n/a	2.000	n/a	n/a	n/a	1.600	1.122	1.333	n/a	2.000	n/a	2.286	n/a	0.887
PM Peak Hr:																	16:30
Pk Vol	0	235	3	0	3	0	0	0	12	490	6	0	5	0	7	0	761
PHF	n/a	1.089	2.667	n/a	2.667	n/a	n/a	n/a	1.667	1.127	2.000	n/a	2.400	n/a	1.714	n/a	0.924

TRAFFIC RESEARCH & ANALYSIS, INC.
Specializing in Traffic Data Collection

Traffic Research & Analysis, Inc.
3844 East Indian School Road
Phoenix, AZ 85018
(602) 840-1500

Intersection TMC: 1602970
Count Date: 5/18/2016

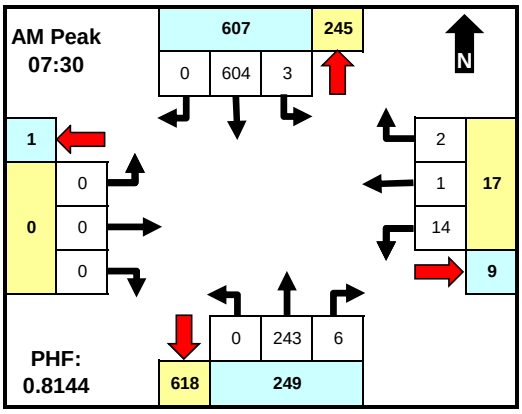

	From North				From East				From South				From West				INTSEC
	WILLIAMSON VALLEY R				MERRILL DR				WILLIAMSON VALLEY R				MERRILL DR				
Time	LT	Thru	RT	Ped	LT	Thru	RT	Ped	LT	Thru	RT	Ped	LT	Thru	RT	Ped	TOTAL
6:00	0	35	0	0	0	0	0	0	0	13	1	0	0	0	0	0	49
6:15	0	53	0	0	3	0	0	0	0	16	1	0	0	0	0	0	73
6:30	1	101	0	0	1	0	0	0	0	34	0	0	0	0	0	0	137
6:45	0	66	0	0	3	0	1	0	0	31	0	0	0	0	0	0	101
7:00	0	97	0	0	2	0	1	0	0	43	1	0	0	0	0	0	144
7:15	0	130	0	0	7	0	1	0	0	40	1	0	0	0	0	0	179
7:30	1	211	0	0	8	0	0	0	0	47	1	0	0	0	0	0	268
7:45	1	165	0	0	3	0	0	0	0	72	1	0	0	0	0	0	242
8:00	1	114	0	0	3	1	1	0	0	54	4	0	0	0	0	0	178
8:15	0	114	0	0	0	0	1	0	0	70	0	0	0	0	0	0	185
8:30	0	102	0	0	6	0	1	0	0	62	2	0	0	0	0	0	173
8:45	0	98	0	0	2	0	0	0	0	53	1	0	0	0	0	0	154
Total	4	1286	0	0	38	1	6	0	0	535	13	0	0	0	0	0	1883
Pk Hr																	7:30 AM
Pk Vol	3	604	0	0	14	1	2	0	0	243	6	0	0	0	0	0	873
PHF	0.750	0.716	0.000	0.000	0.438	0.250	0.500	0.000	0.000	0.844	0.375	0.000	0.000	0.000	0.000	0.000	0.814

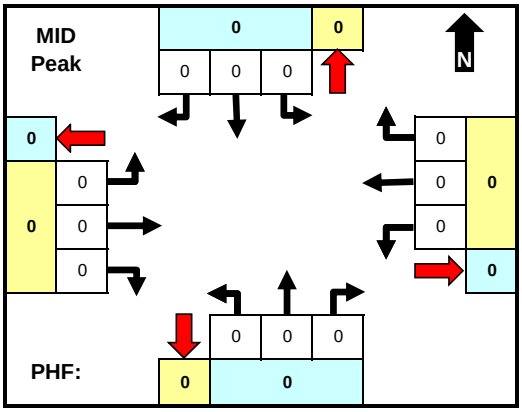

Time	LT	Thru	RT	Ped	LT	Thru	RT	Ped	LT	Thru	RT	Ped	LT	Thru	RT	Ped	TOTAL
Total	0	0	0	0	0	0	0	0	0	0	0	0	0	0	0	0	0
Pk Hr																	
Pk Vol																	
PHF																	

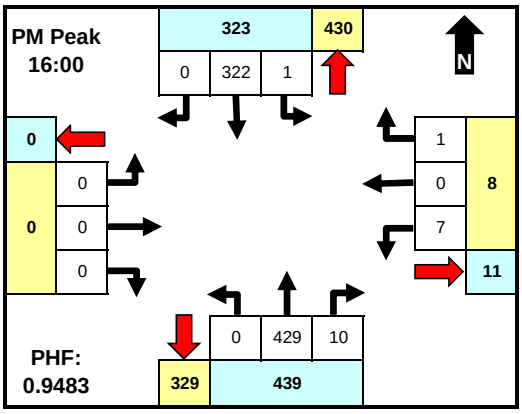

Time	LT	Thru	RT	Ped	LT	Thru	RT	Ped	LT	Thru	RT	Ped	LT	Thru	RT	Ped	TOTAL
15:30	0	73	0	0	1	0	1	0	0	111	4	0	0	0	0	0	190
15:45	0	66	0	0	1	0	1	0	0	93	0	0	0	0	0	0	161
16:00	0	79	0	0	0	0	0	0	0	113	2	0	0	0	0	0	194
16:15	0	98	0	0	2	0	0	0	0	101	2	0	0	0	0	0	203
16:30	1	78	0	0	2	0	1	0	0	102	2	0	0	0	0	0	186
16:45	0	67	0	0	3	0	0	0	0	113	4	0	0	0	0	0	187
17:00	0	66	0	0	2	0	0	0	0	112	4	0	0	0	0	0	184
17:15	0	46	0	0	1	0	0	0	0	120	3	0	0	0	0	0	170
17:30	2	44	0	0	3	0	0	0	0	108	1	0	0	0	0	0	158
17:45	0	43	0	0	4	0	0	0	0	95	1	0	0	0	0	0	143
18:00	0	44	0	0	1	0	2	0	0	74	2	0	0	0	0	0	123
18:15	1	47	0	0	2	0	0	0	0	88	6	0	0	0	0	0	144
Total	4	751	0	0	22	0	5	0	0	1230	31	0	0	0	0	0	2043
Pk Hr																	4:00 PM
Pk Vol	1	322	0	0	7	0	1	0	0	429	10	0	0	0	0	0	770
PHF	0.250	0.821	0.000	0.000	0.583	0.000	0.250	0.000	0.000	0.949	0.625	0.000	0.000	0.000	0.000	0.000	0.948

Intersection Statistics

Per	Peak Hour	Pk Hr Vol	Peak Intvl	Pk Intv Vol	PHF
AM	7:30 AM	873	7:30 AM	268	0.814
MID					
PM	4:00 PM	770	4:15 PM	203	0.948

Peak Hour Statistics by Approach

Per	Peak Hour	Vol	PHF	Peak Hour	Vol	PHF	Peak Hour	Vol	PHF	Peak Hour	Vol	PHF
AM	7:15 AM	623	0.735	7:15 AM	24	0.750	7:45 AM	265	0.908			
MID												
PM	4:00 PM	323	0.824	5:30 PM	12	0.750	4:45 PM	465	0.945			

Comments

Approach & Departure Volumes (No Peds)

Per	Approach	Depart	Approach	Depart	Approach	Depart	Approach	Depart
AM	1290	541	45	17	548	1324	0	1
MID	0	0	0	0	0	0	0	0
PM	755	1235	27	35	1261	773	0	0

TRAFFIC RESEARCH & ANALYSIS, INC.
Specializing in Traffic Data Collection

Traffic Research & Analysis, Inc.
3844 East Indian School Road
Phoenix, AZ 85018
(602) 840-1500

Intersection TMC: 1602971
Count Date: 5/18/2016

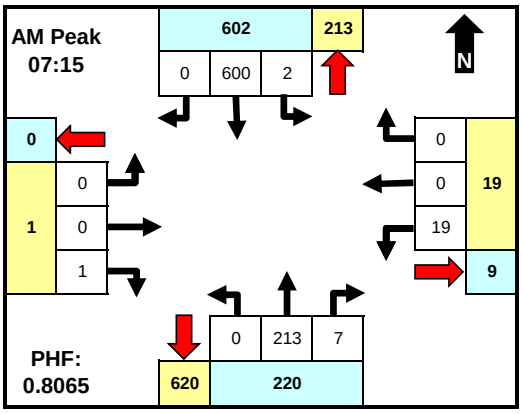

	From North				From East				From South				From West				INTSEC
	WILLIAMSON VALLEY R				MCINTOSH DR				WILLIAMSON VALLEY R				MCINTOSH DR				
Time	LT	Thru	RT	Ped	LT	Thru	RT	Ped	LT	Thru	RT	Ped	LT	Thru	RT	Ped	TOTAL
6:00	0	35	0	0	1	0	0	0	0	15	0	0	0	0	0	0	51
6:15	0	52	0	0	0	0	0	0	0	15	0	0	0	0	0	0	67
6:30	1	100	0	0	0	0	1	0	0	34	0	0	0	0	0	0	136
6:45	1	68	0	0	2	0	1	0	0	35	1	0	0	0	0	0	108
7:00	0	103	0	0	2	0	1	0	0	41	1	0	0	0	0	0	148
7:15	0	122	0	0	6	0	0	0	0	41	2	0	0	0	0	0	171
7:30	0	206	0	0	6	0	0	0	0	47	2	0	0	0	0	0	261
7:45	0	151	0	0	5	0	0	0	0	70	0	0	0	0	1	0	227
8:00	2	121	0	0	2	0	0	0	0	55	3	0	0	0	0	0	183
8:15	0	98	0	0	3	0	0	0	1	64	2	0	1	0	0	0	169
8:30	0	104	0	0	0	0	0	0	0	65	0	0	0	0	0	0	169
8:45	0	105	0	0	2	0	1	0	0	46	1	0	0	0	0	0	155
Total	4	1265	0	0	29	0	4	0	1	528	12	0	1	0	1	0	1845
Pk Hr																	7:15 AM
Pk Vol	2	600	0	0	19	0	0	0	0	213	7	0	0	0	1	0	842
PHF	0.250	0.728	0.000	0.000	0.792	0.000	0.000	0.000	0.000	0.761	0.583	0.000	0.000	0.000	0.250	0.000	0.807

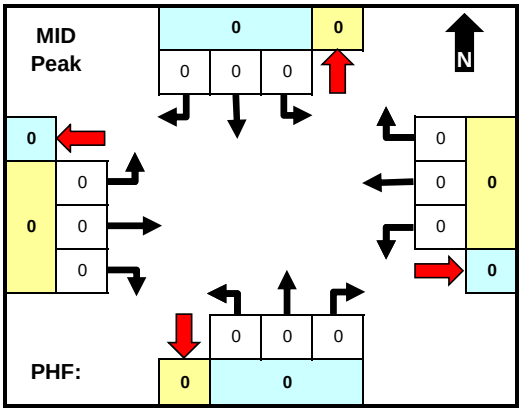

Time	LT	Thru	RT	Ped	LT	Thru	RT	Ped	LT	Thru	RT	Ped	LT	Thru	RT	Ped	TOTAL
Total	0	0	0	0	0	0	0	0	0	0	0	0	0	0	0	0	0
Pk Hr																	
Pk Vol																	
PHF																	

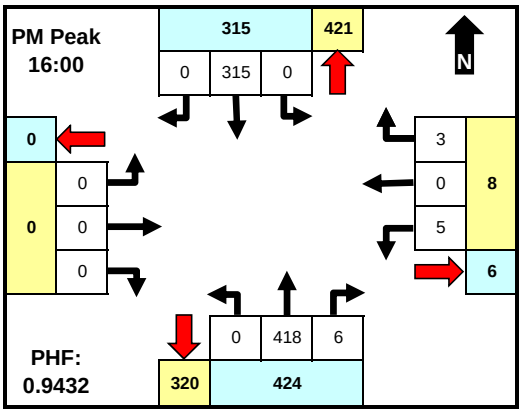

Time	LT	Thru	RT	Ped	LT	Thru	RT	Ped	LT	Thru	RT	Ped	LT	Thru	RT	Ped	TOTAL
15:30	2	74	0	0	2	0	0	0	0	110	3	0	0	0	0	0	191
15:45	0	62	0	0	0	0	0	0	0	96	0	0	0	0	0	0	158
16:00	0	86	0	0	1	0	2	0	0	108	1	0	0	0	0	0	198
16:15	0	84	0	0	1	0	1	0	0	94	2	0	0	0	0	0	182
16:30	0	82	0	0	0	0	0	0	0	102	1	0	0	0	0	0	185
16:45	0	63	0	0	3	0	0	0	0	114	2	0	0	0	0	0	182
17:00	1	65	0	0	2	0	0	0	1	114	3	0	0	0	0	0	186
17:15	0	49	0	0	0	0	0	0	0	118	1	0	0	0	0	0	168
17:30	1	39	0	0	1	0	0	0	0	111	4	0	0	0	0	0	156
17:45	0	40	0	0	0	0	0	0	0	93	1	0	0	0	0	0	134
18:00	1	52	0	0	2	0	0	0	0	75	1	0	0	0	0	0	131
18:15	0	39	0	0	0	0	0	0	0	86	2	0	0	0	0	0	127
Total	5	735	0	0	12	0	3	0	1	1221	21	0	0	0	0	0	1998
Pk Hr																	4:00 PM
Pk Vol	0	315	0	0	5	0	3	0	0	418	6	0	0	0	0	0	747
PHF	0.000	0.916	0.000	0.000	0.417	0.000	0.375	0.000	0.000	0.917	0.750	0.000	0.000	0.000	0.000	0.000	0.943

Intersection Statistics

Per	Peak Hour	Pk Hr Vol	Peak Intvl	Pk Intv Vol	PHF
AM	7:15 AM	842	7:30 AM	261	0.807
MID					
PM	4:00 PM	747	4:00 PM	198	0.943

Peak Hour Statistics by Approach

Per	Peak Hour	Vol	PHF	Peak Hour	Vol	PHF	Peak Hour	Vol	PHF	Peak Hour	Vol	PHF
AM	7:15 AM	602	0.731	7:00 AM	20	0.833	7:45 AM	260	0.929	7:30 AM	2	0.500
MID												
PM	4:00 PM	315	0.916	4:00 PM	8	0.667	4:45 PM	468	0.983			

Comments

Approach & Departure Volumes (No Peds)

Per	Approach	Depart	Approach	Depart	Approach	Depart	Approach	Depart
AM	1269	533	33	16	541	1295	2	1
MID	0	0	0	0	0	0	0	0
PM	740	1224	15	26	1243	747	0	1

TRAFFIC RESEARCH & ANALYSIS, INC.
Specializing in Traffic Data Collection

Traffic Research & Analysis, Inc.
3844 East Indian School Road
Phoenix, AZ 85018
(602) 840-1500

Intersection TMC: 1602972
Count Date: 5/18/2016

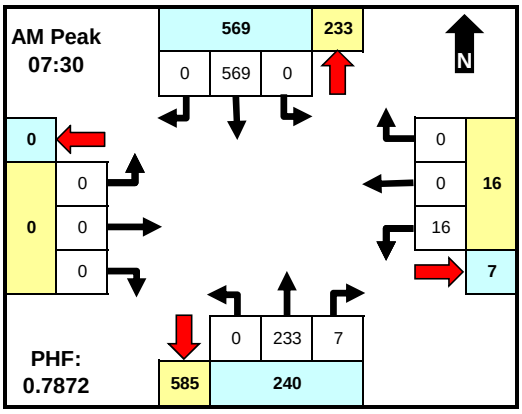

	From North				From East				From South				From West				INTSEC
	WILLIAMSON UALLEY R				KELLY DR				WILLIAMSON UALLEY R				KELLY DR				
Time	LT	Thru	RT	Ped	LT	Thru	RT	Ped	LT	Thru	RT	Ped	LT	Thru	RT	Ped	TOTAL
6:00	1	38	0	0	0	0	0	0	0	15	0	0	0	0	0	0	54
6:15	0	47	0	0	1	0	0	0	0	13	0	0	0	0	0	0	61
6:30	0	95	0	0	5	0	1	0	0	33	1	0	0	0	0	0	135
6:45	0	61	0	0	1	0	1	0	0	32	1	0	0	0	0	0	96
7:00	0	95	0	0	2	0	2	0	0	40	3	0	0	0	0	0	142
7:15	2	120	0	0	0	0	1	0	0	37	0	0	0	0	0	0	160
7:30	0	207	0	0	5	0	0	0	0	50	0	0	0	0	0	0	262
7:45	0	139	0	0	8	0	0	0	0	65	2	0	0	0	0	0	214
8:00	0	117	0	0	2	0	0	0	0	52	4	0	0	0	0	0	175
8:15	0	106	0	0	1	0	0	0	0	66	1	0	0	0	0	0	174
8:30	0	102	0	0	2	0	0	0	0	59	0	0	0	0	0	0	163
8:45	0	94	0	0	3	0	0	0	0	51	3	0	0	0	0	0	151
Total	3	1221	0	0	30	0	5	0	0	513	15	0	0	0	0	0	1787
Pk Hr																	7:30 AM
Pk Vol	0	569	0	0	16	0	0	0	0	233	7	0	0	0	0	0	825
PHF	0.000	0.687	0.000	0.000	0.500	0.000	0.000	0.000	0.000	0.883	0.438	0.000	0.000	0.000	0.000	0.000	0.787

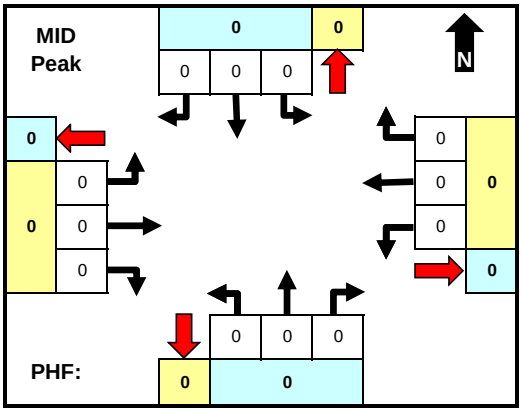

Time	LT	Thru	RT	Ped	LT	Thru	RT	Ped	LT	Thru	RT	Ped	LT	Thru	RT	Ped	TOTAL
Total	0	0	0	0	0	0	0	0	0	0	0	0	0	0	0	0	0
Pk Hr																	
Pk Vol																	
PHF																	

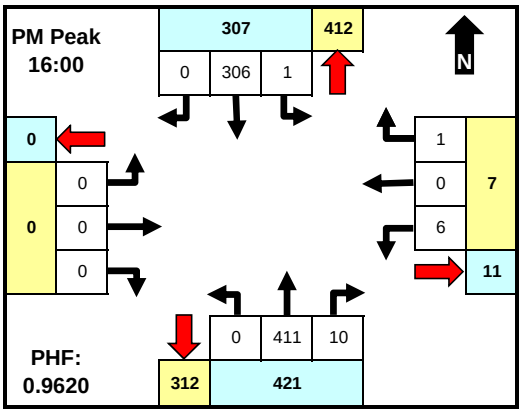

Time	LT	Thru	RT	Ped	LT	Thru	RT	Ped	LT	Thru	RT	Ped	LT	Thru	RT	Ped	TOTAL
15:30	1	75	0	0	1	0	0	0	0	99	3	0	0	0	0	0	179
15:45	1	64	0	0	0	0	0	0	0	95	3	0	0	0	0	0	163
16:00	0	79	0	0	1	0	0	0	0	108	3	0	0	0	0	0	191
16:15	0	90	0	0	2	0	0	0	0	95	2	0	0	0	0	0	189
16:30	1	77	0	0	1	0	1	0	0	96	3	0	0	0	0	0	179
16:45	0	60	0	0	2	0	0	0	0	112	2	0	0	0	0	0	176
17:00	1	67	0	0	0	0	0	0	0	107	2	0	0	0	0	0	177
17:15	0	44	0	0	1	0	1	0	0	116	3	0	0	0	0	0	165
17:30	0	42	0	0	2	0	0	0	0	105	0	0	0	0	0	0	149
17:45	1	37	0	0	3	0	1	0	0	90	2	0	0	0	0	0	134
18:00	0	43	0	0	2	0	1	0	0	77	0	0	0	0	0	0	123
18:15	0	40	0	0	2	0	0	0	0	85	2	0	0	0	0	0	129
Total	5	718	0	0	17	0	4	0	0	1185	25	0	0	0	0	0	1954
Pk Hr																	4:00 PM
Pk Vol	1	306	0	0	6	0	1	0	0	411	10	0	0	0	0	0	735
PHF	0.250	0.850	0.000	0.000	0.750	0.000	0.250	0.000	0.000	0.917	0.833	0.000	0.000	0.000	0.000	0.000	0.962

Intersection Statistics

Per	Peak Hour	Pk Hr Vol	Peak Intvl	Pk Intv Vol	PHF
AM	7:30 AM	825	7:30 AM	262	0.787
MID					
PM	4:00 PM	735	4:00 PM	191	0.962

Peak Hour Statistics by Approach

Per	Peak Hour	Vol	PHF	Peak Hour	Vol	PHF	Peak Hour	Vol	PHF	Peak Hour	Vol	PHF
AM	7:15 AM	585	0.707	7:00 AM	18	0.563	7:45 AM	249	0.929			
MID												
PM	3:45 PM	312	0.867	5:15 PM	11	0.688	4:45 PM	447	0.939			

Comments

Approach & Departure Volumes (No Peds)

Per	Approach	Depart	Approach	Depart	Approach	Depart	Approach	Depart
AM	1224	518	35	18	528	1251	0	0
MID	0	0	0	0	0	0	0	0
PM	723	1189	21	30	1210	735	0	0

TRAFFIC RESEARCH & ANALYSIS, INC.
Specializing in Traffic Data Collection

Traffic Research & Analysis, Inc.
3844 East Indian School Road
Phoenix, AZ 85018
(602) 840-1500

Intersection TMC: 1602973
Count Date: 5/18/2016

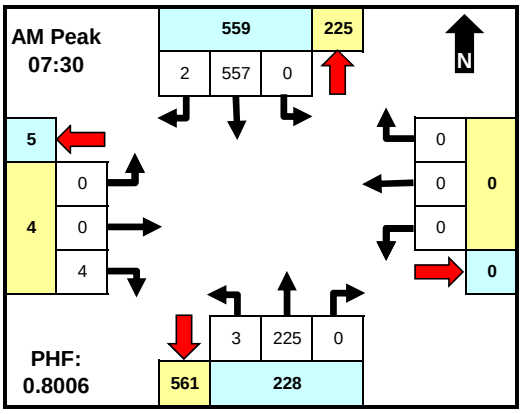

	From North				From East				From South				From West				INTSEC
	N WILLIAMSON VALLEY				STRINGFIELD DR				N WILLIAMSON VALLEY				STRINGFIELD DR				
Time	LT	Thru	RT	Ped	LT	Thru	RT	Ped	LT	Thru	RT	Ped	LT	Thru	RT	Ped	TOTAL
6:00	0	35	0	0	0	0	0	0	0	15	0	0	0	0	0	0	50
6:15	0	51	0	0	0	0	0	0	0	15	0	0	0	0	0	0	66
6:30	0	94	0	0	0	0	0	0	0	34	0	0	0	0	1	0	129
6:45	0	69	0	0	0	0	0	0	1	32	0	0	1	0	0	0	103
7:00	0	99	0	0	0	0	0	0	1	42	0	0	0	0	0	0	142
7:15	0	112	0	0	0	0	0	0	0	42	0	0	0	0	2	0	156
7:30	0	202	0	0	0	0	0	0	1	43	0	0	0	0	1	0	247
7:45	0	142	2	0	0	0	0	0	2	64	0	0	0	0	1	0	211
8:00	0	118	0	0	0	0	0	0	0	51	0	0	0	0	1	0	170
8:15	0	95	0	0	0	0	0	0	0	67	0	0	0	0	1	0	163
8:30	0	101	0	0	0	0	0	0	1	62	0	0	0	0	1	0	165
8:45	0	100	0	0	0	0	0	0	0	49	0	0	0	0	1	0	150
Total	0	1218	2	0	0	0	0	0	6	516	0	0	1	0	9	0	1752
Pk Hr																	7:30 AM
Pk Vol	0	557	2	0	0	0	0	0	3	225	0	0	0	0	4	0	791
PHF	0.000	0.689	0.250	0.000	0.000	0.000	0.000	0.000	0.375	0.840	0.000	0.000	0.000	0.000	1.000	0.000	0.801

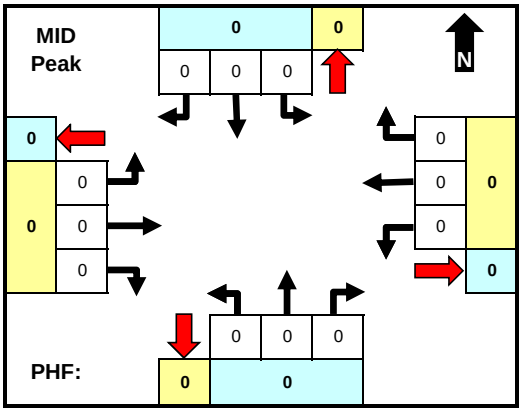

Time	LT	Thru	RT	Ped	LT	Thru	RT	Ped	LT	Thru	RT	Ped	LT	Thru	RT	Ped	TOTAL
Total	0	0	0	0	0	0	0	0	0	0	0	0	0	0	0	0	0
Pk Hr																	
Pk Vol																	
PHF																	

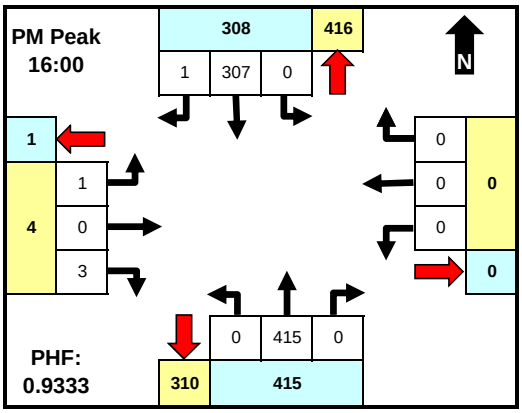

Time	LT	Thru	RT	Ped	LT	Thru	RT	Ped	LT	Thru	RT	Ped	LT	Thru	RT	Ped	TOTAL
15:30	0	77	0	0	0	0	0	0	1	100	0	0	0	0	0	0	178
15:45	0	64	1	0	0	0	0	0	2	90	0	0	0	0	0	0	157
16:00	0	85	0	0	0	0	0	0	0	108	0	0	1	0	1	0	195
16:15	0	83	0	0	0	0	0	1	0	98	0	0	0	0	1	0	183
16:30	0	78	1	0	0	0	0	0	0	98	0	0	0	0	1	0	178
16:45	0	61	0	0	0	0	0	0	0	111	0	0	0	0	0	0	172
17:00	0	63	0	0	0	0	0	0	1	103	0	0	0	0	1	0	168
17:15	0	44	0	0	0	0	0	0	0	119	0	0	0	0	2	0	165
17:30	0	39	0	0	0	0	0	0	0	105	0	0	0	0	0	0	144
17:45	0	39	0	0	0	0	0	0	1	92	0	0	0	0	0	0	132
18:00	0	46	0	0	0	0	0	0	0	75	0	0	0	0	0	0	121
18:15	0	39	0	0	0	0	0	0	0	82	0	0	0	0	1	0	122
Total	0	718	2	0	0	0	0	1	5	1181	0	0	1	0	7	0	1915
Pk Hr																	4:00 PM
Pk Vol	0	307	1	0	0	0	0	1	0	415	0	0	1	0	3	0	728
PHF	0.000	0.903	0.250	0.000	0.000	0.000	0.000	0.250	0.000	0.935	0.000	0.000	0.250	0.000	0.750	0.000	0.933

Intersection Statistics

Per	Peak Hour	Pk Hr Vol	Peak Intvl	Pk Intv Vol	PHF
AM	7:30 AM	791	7:30 AM	247	0.801
MID					
PM	4:00 PM	728	4:00 PM	195	0.933

Peak Hour Statistics by Approach

Per	Peak Hour	Vol	PHF	Peak Hour	Vol	PHF	Peak Hour	Vol	PHF	Peak Hour	Vol	PHF
AM	7:15 AM	576	0.713				7:45 AM	247	0.922	7:15 AM	5	0.625
MID												
PM	3:45 PM	312	0.918	3:30 PM	1	0.250	4:45 PM	439	0.922	3:45 PM	4	0.500

Comments

Approach & Departure Volumes (No Peds)

Per	Approach	Depart	Approach	Depart	Approach	Depart	Approach	Depart
AM	1220	517	0	0	522	1227	10	8
MID	0	0	0	0	0	0	0	0
PM	720	1182	0	0	1186	725	8	7

TRAFFIC RESEARCH & ANALYSIS, INC.
Specializing in Traffic Data Collection

Traffic Research & Analysis, Inc.
3844 East Indian School Road
Phoenix, AZ 85018
(602) 840-1500

Intersection TMC: 1602974
Count Date: 5/19/2016

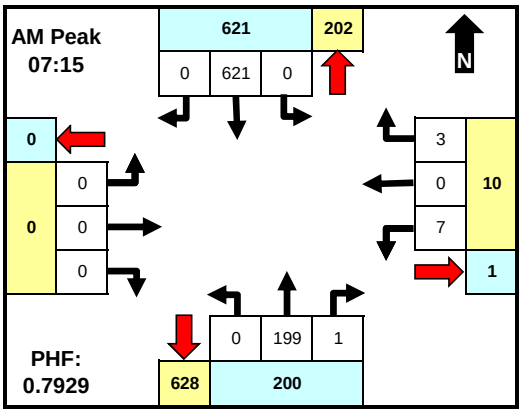

	From North				From East				From South				From West				INTSEC
	N WILLIAMSON VALLEY				W ONEAL RD				N WILLIAMSON VALLEY				W ONEAL RD				
Time	LT	Thru	RT	Ped	LT	Thru	RT	Ped	LT	Thru	RT	Ped	LT	Thru	RT	Ped	TOTAL
6:00	0	36	0	0	1	0	0	0	0	16	0	0	0	0	0	0	53
6:15	0	61	0	0	3	0	0	0	0	16	0	0	0	0	0	0	80
6:30	0	66	0	0	0	0	0	0	0	38	0	0	0	0	0	0	104
6:45	0	72	0	0	1	0	2	0	0	41	0	0	0	0	0	0	116
7:00	0	82	0	0	1	0	1	0	0	32	1	0	0	0	0	0	117
7:15	0	137	0	0	3	0	0	0	0	38	0	0	0	0	0	0	178
7:30	0	212	0	0	2	0	0	0	0	48	0	0	0	0	0	0	262
7:45	0	157	0	0	2	0	1	0	0	62	1	0	0	0	0	0	223
8:00	0	115	0	0	0	0	2	0	0	51	0	0	0	0	0	0	168
8:15	0	93	0	0	4	0	0	0	0	60	0	0	0	0	0	0	157
8:30	0	104	0	0	3	0	0	0	0	46	1	0	0	0	0	0	154
8:45	0	91	0	0	3	0	0	0	0	60	2	0	0	0	0	0	156
Total	0	1226	0	0	23	0	6	0	0	508	5	0	0	0	0	0	1768
Pk Hr																	7:15 AM
Pk Vol	0	621	0	0	7	0	3	0	0	199	1	0	0	0	0	0	831
PHF	0.000	0.732	0.000	0.000	0.583	0.000	0.375	0.000	0.000	0.802	0.250	0.000	0.000	0.000	0.000	0.000	0.793

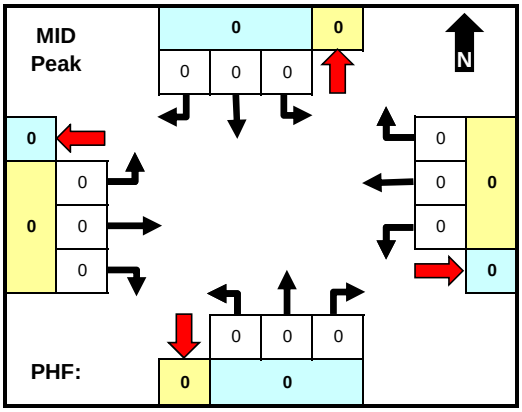

Time	LT	Thru	RT	Ped	LT	Thru	RT	Ped	LT	Thru	RT	Ped	LT	Thru	RT	Ped	TOTAL
Total	0	0	0	0	0	0	0	0	0	0	0	0	0	0	0	0	0
Pk Hr																	
Pk Vol																	
PHF																	

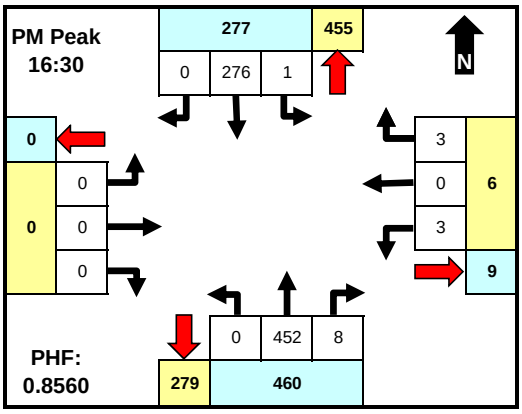

Time	LT	Thru	RT	Ped	LT	Thru	RT	Ped	LT	Thru	RT	Ped	LT	Thru	RT	Ped	TOTAL
15:30	0	76	0	0	0	0	1	0	0	112	1	0	0	0	0	0	190
15:45	0	68	0	0	1	0	0	0	0	95	2	0	0	0	0	0	166
16:00	0	79	0	0	1	0	0	0	0	95	0	0	0	0	0	0	175
16:15	0	52	0	0	1	0	0	0	0	97	2	0	0	0	0	0	152
16:30	1	64	0	0	1	0	2	0	0	116	2	0	0	0	0	0	186
16:45	0	63	0	0	0	0	0	0	0	106	2	0	0	0	0	0	171
17:00	0	84	0	0	1	0	0	0	0	130	2	0	0	0	0	0	217
17:15	0	65	0	0	1	0	1	0	0	100	2	0	0	0	0	0	169
17:30	0	66	0	0	3	0	0	0	0	102	1	0	0	0	0	0	172
17:45	1	51	0	0	0	0	0	0	0	77	0	0	0	0	0	0	129
18:00	0	54	0	0	0	0	0	0	0	81	3	0	0	0	0	0	138
18:15	1	39	0	0	0	0	0	0	0	62	0	0	0	0	0	0	102
Total	3	761	0	0	9	0	4	0	0	1173	17	0	0	0	0	0	1967
Pk Hr																	4:30 PM
Pk Vol	1	276	0	0	3	0	3	0	0	452	8	0	0	0	0	0	743
PHF	0.250	0.821	0.000	0.000	0.750	0.000	0.375	0.000	0.000	0.869	1.000	0.000	0.000	0.000	0.000	0.000	0.856

Intersection Statistics

Per	Peak Hour	Pk Hr Vol	Peak Intvl	Pk Intv Vol	PHF
AM	7:15 AM	831	7:30 AM	262	0.793
MID					
PM	4:30 PM	743	5:00 PM	217	0.856

Peak Hour Statistics by Approach

Per	Peak Hour	Vol	PHF	Peak Hour	Vol	PHF	Peak Hour	Vol	PHF	Peak Hour	Vol	PHF
AM	7:15 AM	621	0.732	7:45 AM	12	0.750	7:30 AM	222	0.881			
MID												
PM	4:45 PM	278	0.827	3:45 PM	6	0.500	4:30 PM	460	0.871			

Comments

Approach & Departure Volumes (No Peds)

Per	Approach	Depart	Approach	Depart	Approach	Depart	Approach	Depart
AM	1226	514	29	5	513	1249	0	0
MID	0	0	0	0	0	0	0	0
PM	764	1177	13	20	1190	770	0	0

TRAFFIC RESEARCH & ANALYSIS, INC.
Specializing in Traffic Data Collection

Traffic Research & Analysis, Inc.
3844 East Indian School Road
Phoenix, AZ 85018
(602) 840-1500

Intersection TMC: 1602960
Count Date: 4/7/2016

N WILLIAMSON VALLEY RD & N BRIDLE PATH

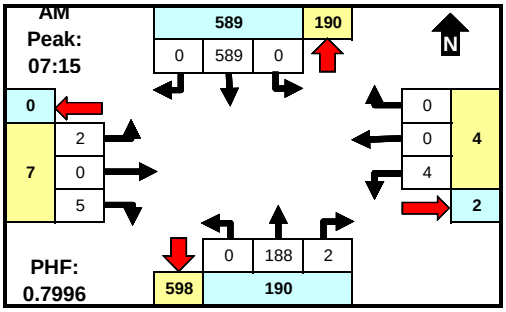

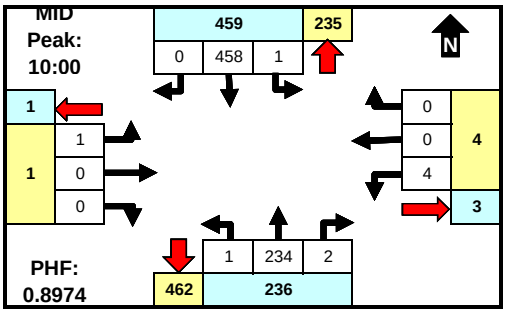

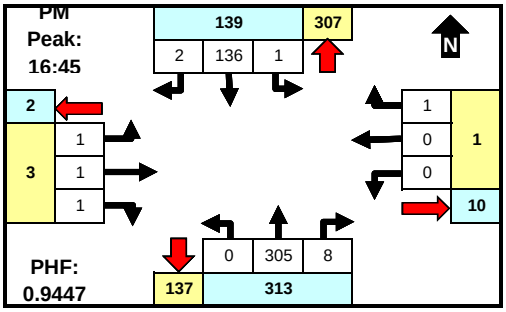

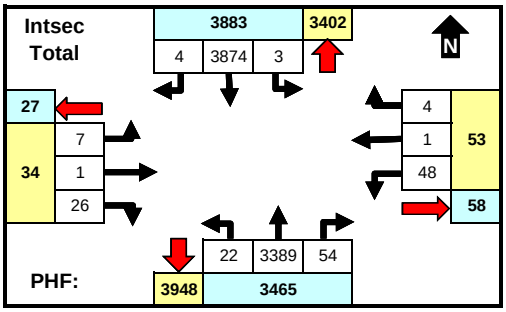

Comments

MID period defined as 10:00 AM - 2:00 PM. Peaks defined based on total intersection volume for all vehicle types.

	From North				From East				From South				From West				INTSEC
	N WILLIAMSON VALLEY				N BRIDLE PATH				N WILLIAMSON VALLEY				N BRIDLE PATH				
Time	LT	Thru	RT	U	LT	Thru	RT	U	LT	Thru	RT	U	LT	Thru	RT	U	TOTAL
00:00	0	0	0	0	0	0	0	0	0	2	0	0	0	0	0	0	2
00:15	0	2	0	0	0	0	0	0	0	4	0	0	0	0	0	0	6
00:30	0	1	0	0	0	0	0	0	0	1	0	0	0	0	0	0	2
00:45	0	1	0	0	0	0	0	0	0	2	0	0	0	0	0	0	3
01:00	0	2	0	0	0	0	0	0	0	4	0	0	0	0	0	0	6
01:15	0	0	0	0	0	0	0	0	0	2	0	0	0	0	0	0	2
01:30	0	0	0	0	0	0	0	0	0	2	0	0	0	0	0	0	2
01:45	0	0	0	0	0	0	0	0	0	2	0	0	0	0	0	0	2
02:00	0	1	0	0	0	0	0	0	0	1	0	0	0	0	0	0	2
02:15	0	1	0	0	0	0	0	0	0	1	0	0	0	0	0	0	2
02:30	0	0	0	0	0	0	0	0	0	2	1	0	0	0	0	0	3
02:45	0	0	0	0	0	0	0	0	0	2	0	0	0	0	0	0	2
03:00	0	0	0	0	0	0	0	0	0	1	0	0	0	0	0	0	1
03:15	0	1	0	0	0	0	0	0	0	1	0	0	0	0	0	0	2
03:30	0	3	0	0	0	0	0	0	0	0	0	0	0	0	0	0	3
03:45	0	1	0	0	0	0	0	0	0	0	0	0	0	0	0	0	1
04:00	0	3	0	0	0	0	0	0	0	0	0	0	0	0	0	0	3
04:15	0	3	0	0	1	0	0	0	1	0	0	0	0	0	0	0	5
04:30	0	7	0	0	0	0	0	0	0	2	0	0	0	0	0	0	9
04:45	0	7	0	0	0	0	0	0	0	6	0	0	0	0	0	0	13
05:00	0	12	0	0	0	0	0	0	0	9	0	0	0	0	0	0	21
05:15	0	20	0	0	1	0	0	0	0	2	0	0	0	0	0	0	23
05:30	0	28	0	0	1	0	0	0	0	8	0	0	0	0	1	0	38
05:45	0	22	0	0	2	0	0	0	0	9	1	0	0	0	0	0	34
06:00	0	42	0	0	0	0	0	0	0	6	0	0	0	0	0	0	48
06:15	0	60	0	0	0	0	0	0	0	17	0	0	0	0	0	0	77
06:30	0	87	0	0	0	0	0	0	0	25	1	0	0	0	1	0	114
06:45	0	70	0	0	2	0	0	0	0	32	0	0	0	0	0	0	104
07:00	0	93	0	0	0	0	0	0	0	31	0	0	0	0	2	0	126
07:15	0	127	0	0	1	0	0	0	0	39	0	0	1	0	2	0	170
07:30	0	195	0	0	2	0	0	0	0	49	0	0	0	0	1	0	247
07:45	0	147	0	0	1	0	0	0	0	55	2	0	1	0	1	0	207
08:00	0	120	0	0	0	0	0	0	0	45	0	0	0	0	1	0	166
08:15	0	94	0	0	1	0	0	0	0	69	2	0	0	0	1	0	167
08:30	0	106	0	0	0	0	0	0	0	67	0	0	0	0	0	0	173
08:45	0	81	0	0	1	0	0	0	2	47	0	0	0	0	0	0	131
09:00	0	96	0	1	2	0	0	0	1	48	2	0	0	0	0	0	150
09:15	0	95	0	0	0	0	0	0	1	51	1	0	0	0	1	0	149
09:30	0	114	0	0	1	0	0	0	0	70	0	0	0	0	2	0	187
09:45	0	84	0	1	2	0	0	0	0	68	1	0	0	0	0	0	156
10:00	1	101	0	0	0	0	0	0	0	38	0	0	0	0	0	0	140
10:15	0	111	0	0	2	0	0	0	0	72	0	0	0	0	0	0	185
10:30	0	130	0	0	0	0	0	0	0	64	1	0	0	0	0	0	195
10:45	0	116	0	0	2	0	0	0	1	60	0	0	1	0	0	0	180
11:00	0	64	0	0	0	0	1	0	1	58	1	0	1	0	1	0	127
11:15	0	95	0	0	1	0	0	0	0	57	1	0	0	0	0	0	154
11:30	0	104	0	0	0	0	0	0	0	85	2	0	0	0	0	0	191
11:45	0	79	0	0	2	0	0	0	0	79	2	0	0	0	0	0	162
12:00	0	52	0	0	1	0	0	0	0	55	2	0	0	0	0	0	110
12:15	0	58	0	0	1	0	0	0	0	56	0	0	0	0	0	0	115
12:30	0	70	0	0	0	0	1	0	0	56	2	0	0	0	0	0	129
12:45	0	58	0	0	2	0	0	0	0	47	2	0	0	0	1	0	110
13:00	0	51	0	0	0	0	0	0	0	59	1	0	0	0	0	0	111
13:15	0	58	0	0	1	0	1	0	2	56	2	0	0	0	0	0	120
13:30	0	47	0	0	1	0	0	0	0	54	0	0	0	0	0	0	102
13:45	0	43	0	0	0	0	0	0	1	59	0	0	0	0	0	0	103
14:00	0	45	0	0	3	1	0	0	0	73	1	0	1	0	0	0	124
14:15	0	49	0	0	1	0	0	0	0	55	1	0	0	0	1	0	107
14:30	0	54	0	0	2	0	0	0	0	39	1	0	0	0	1	0	97
14:45	0	64	0	0	1	0	0	0	0	40	0	0	0	0	0	0	105
15:00	0	42	0	0	1	0	0	0	0	53	0	0	0	0	0	0	96
15:15	0	43	0	0	3	0	0	0	1	51	1	0	0	0	0	0	99
15:30	0	40	0	0	0	0	0	0	1	67	0	0	0	0	0	0	108
15:45	0	47	0	0	0	0	0	0	0	64	1	0	0	0	2	0	114
16:00	0	47	0	0	0	0	0	0	0	64	2	0	0	0	0	0	113
16:15	0	38	0	0	0	0	0	0	0	57	1	0	0	0	1	0	97
16:30	0	33	0	0	0	0	0	0	0	83	1	0	1	0	0	0	118
16:45	1	34	1	0	0	0	1	0	0	87	3	0	0	1	0	0	128
17:00	0	31	1	0	0	0	0	0	0	78	3	0	0	0	0	0	113
17:15	0	34	1	0	0	0	0	0	1	93	2	0	0	0	0	0	131
17:30	1	44	0	0	1	0	0	0	2	72	1	0	0	0	2	0	123
17:45	0	43	0	0	1	0	0	0	1	77	2	0	0	0	2	0	126
18:00	0	25	0	0	0	0	0	0	0	44	0	0	1	0	0	0	70
18:15	0	35	0	0	0	0	0	0	1	48	0	0	0	0	0	0	84
18:30	0	20	0	0	0	0	0	0	0	41	1	0	0	0	0	0	62
18:45	0	13	0	0	0	0	0	0	0	41	0	0	0	0	1	0	55
19:00	0	11	0	0	0	0	0	0	1	45	1	0	0	0	0	0	58
19:15	0	19	0	0	0	0	0	0	1	48	1	0	0	0	0	0	69
19:30	0	5	0	0	0	0	0	0	0	33	1	0	0	0	0	0	39
19:45	0	10	0	0	1	0	0	0	0	45	1	0	0	0	0	0	57
20:00	0	12	0	0	2	0	0	0	1	37	0	0	0	0	1	0	53
20:15	0	6	0	0	1	0	0	0	1	28	0	0	0	0	0	0	36
20:30	0	8	0	0	0	0	0	0	0	27	0	0	0	0	0	0	35
20:45	0	5	0	0	0	0	0	0	0	24	0	0	0	0	0	0	29
21:00	0	7	0	0	0	0	0	0	1	19	1	0	0	0	0	0	28
21:15	0	4	0	0	0	0	0	0	0	21	1	0	0	0	0	0	26
21:30	0	6	0	0	0	0	0	0	0	21	0	0	0	0	0	0	27
21:45	0	8	1	0	0	0	0	0	0	15	0	0	0	0	0	0	24
22:00	0	4	0	0	0	0	0	0	0	10	0	0	0	0	0	0	14
22:15	0	9	0	0	0	0	0	0	0	6	0	0	0	0	0	0	15
22:30	0	1	0	0	0	0	0	0	0	3	0	0	0	0	0	0	4
22:45	0	1	0	0	0	0	0	0	0	8	0	0	0	0	0	0	9
23:00	0	3	0	0	0	0	0	0	0	6	0	0	0	0	0	0	9
23:15	0	4	0	0	0	0	0	0	0	7	0	0	0	0	0	0	11
23:30	0	5	0	0	0	0	0	0	0	11	0	0	0	0	0	0	16
23:45	0	2	0	0	0	0	0	0	0	11	0	0	0	0	0	0	13
Total	3	3874	4	2	48	1	4	0	22	3389	54	0	7	1	26	0	7435
AM Peak Hr:																	7:15
Pk Vol	0	589	0	0	4	0	0	0	0	188	2	0	2	0	5	0	790
PHF	n/a	1.324	n/a	n/a	2.000	n/a	n/a	n/a	n/a	1.170	4.000	n/a	2.000	n/a	1.600	n/a	0.800
MID Peak Hr:																	10:00
Pk Vol	1	458	0	0	4	0	0	0	1	234	1	0	1	0	0	0	700
PHF	4.000	1.135	n/a	n/a	2.000	n/a	n/a	n/a	4.000	1.231	4.000	n/a	4.000	n/a	n/a	n/a	0.897
PM Peak Hr:																	16:45
Pk Vol	1	136	2	0	0	0	1	0	0	305	8	0	1	1	1	0	495
PHF	0.250	0.895	0.500	n/a	n/a	n/a	0.250	n/a	n/a	0.876	0.667	n/a	0.250	0.250	0.250	n/a	0.945

TRAFFIC RESEARCH & ANALYSIS, INC.
Specializing in Traffic Data Collection

Traffic Research & Analysis, Inc.
3844 East Indian School Road
Phoenix, AZ 85018
(602) 840-1500

Intersection TMC: 1602975
Count Date: 5/18/2016

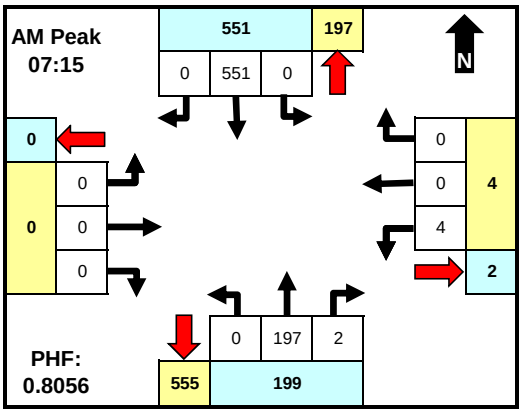

	From North				From East				From South				From West				INTSEC
	N WILLIAMSON VALLEY				N LARIAT LN				N WILLIAMSON VALLEY				N LARIAT LN				
Time	LT	Thru	RT	Ped	LT	Thru	RT	Ped	LT	Thru	RT	Ped	LT	Thru	RT	Ped	TOTAL
6:00	0	33	0	0	0	0	0	0	0	15	0	0	0	0	0	0	48
6:15	0	52	0	0	0	0	0	0	0	14	0	0	0	0	0	0	66
6:30	0	88	0	0	0	0	1	0	0	34	0	0	0	0	0	0	123
6:45	0	64	0	0	0	0	0	0	0	30	0	0	0	0	0	0	94
7:00	0	96	0	0	3	0	0	0	0	41	1	0	0	0	0	0	141
7:15	0	116	0	0	2	0	0	0	0	39	0	0	0	0	0	0	157
7:30	0	189	0	0	1	0	0	0	0	44	0	0	0	0	0	0	234
7:45	0	131	0	0	1	0	0	0	0	64	1	0	0	0	0	0	197
8:00	0	115	0	0	0	0	0	0	0	50	1	0	0	0	0	0	166
8:15	0	91	0	0	0	0	0	0	0	65	0	0	0	0	0	0	156
8:30	0	98	0	0	0	0	0	0	0	60	0	0	0	0	0	0	158
8:45	0	96	0	0	1	0	0	0	0	47	0	0	0	0	0	0	144
Total	0	1169	0	0	8	0	1	0	0	503	3	0	0	0	0	0	1684
Pk Hr																	7:15 AM
Pk Vol	0	551	0	0	4	0	0	0	0	197	2	0	0	0	0	0	754
PHF	0.000	0.729	0.000	0.000	0.500	0.000	0.000	0.000	0.000	0.770	0.500	0.000	0.000	0.000	0.000	0.000	0.806

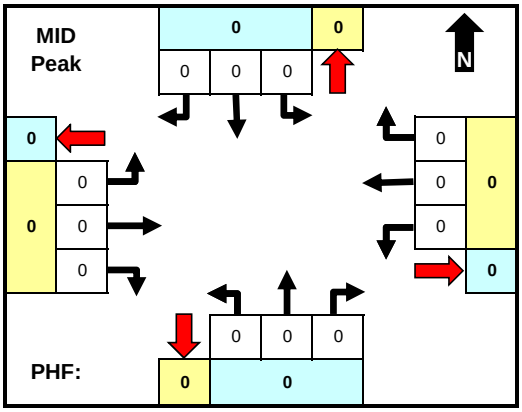

Time	LT	Thru	RT	Ped	LT	Thru	RT	Ped	LT	Thru	RT	Ped	LT	Thru	RT	Ped	TOTAL
Total	0	0	0	0	0	0	0	0	0	0	0	0	0	0	0	0	0
Pk Hr																	
Pk Vol																	
PHF																	

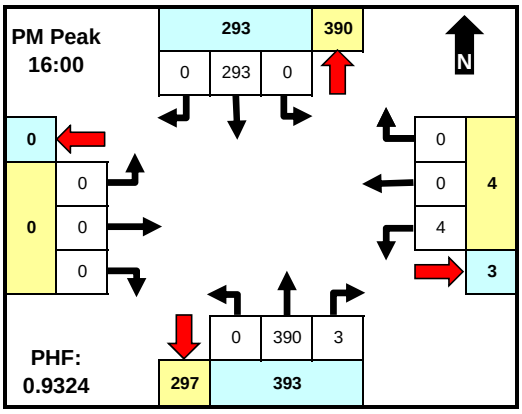

Time	LT	Thru	RT	Ped	LT	Thru	RT	Ped	LT	Thru	RT	Ped	LT	Thru	RT	Ped	TOTAL
15:30	1	76	0	0	1	0	0	0	0	94	3	0	0	0	0	0	175
15:45	0	61	0	0	0	0	0	0	0	85	1	0	0	0	0	0	147
16:00	0	81	0	0	1	0	0	0	0	103	0	0	0	0	0	0	185
16:15	0	76	0	0	2	0	0	0	0	87	2	0	0	0	0	0	167
16:30	0	80	0	0	1	0	0	0	0	97	1	0	0	0	0	0	179
16:45	0	56	0	0	0	0	0	0	0	103	0	0	0	0	0	0	159
17:00	0	56	0	0	1	0	0	0	0	102	1	0	0	0	0	0	160
17:15	0	43	0	0	0	0	0	0	0	108	2	0	0	0	0	0	153
17:30	1	37	0	0	1	0	0	0	0	98	1	0	0	0	0	0	138
17:45	1	36	0	0	0	0	0	0	0	86	1	0	0	0	0	0	124
18:00	0	50	0	0	0	0	0	0	0	70	1	0	0	0	0	0	121
18:15	0	37	0	0	0	0	0	0	0	77	0	0	0	0	0	0	114
Total	3	689	0	0	7	0	0	0	0	1110	13	0	0	0	0	0	1822
Pk Hr																	4:00 PM
Pk Vol	0	293	0	0	4	0	0	0	0	390	3	0	0	0	0	0	690
PHF	0.000	0.904	0.000	0.000	0.500	0.000	0.000	0.000	0.000	0.947	0.375	0.000	0.000	0.000	0.000	0.000	0.932

Intersection Statistics

Per	Peak Hour	Pk Hr Vol	Peak Intvl	Pk Intv Vol	PHF
AM	7:15 AM	754	7:30 AM	234	0.806
MID					
PM	4:00 PM	690	4:00 PM	185	0.932

Peak Hour Statistics by Approach

Per	Peak Hour	Vol	PHF	Peak Hour	Vol	PHF	Peak Hour	Vol	PHF	Peak Hour	Vol	PHF
AM	7:15 AM	551	0.729	7:00 AM	7	0.583	7:45 AM	241	0.927			
MID												
PM	3:45 PM	298	0.920	3:30 PM	4	0.500	4:45 PM	415	0.943			

Comments

Approach & Departure Volumes (No Peds)

Per	Approach	Depart	Approach	Depart	Approach	Depart	Approach	Depart
AM	1169	504	9	3	506	1177	0	0
MID	0	0	0	0	0	0	0	0
PM	692	1110	7	16	1123	696	0	0

TRAFFIC RESEARCH & ANALYSIS, INC.
Specializing in Traffic Data Collection

Traffic Research & Analysis, Inc.
3844 East Indian School Road
Phoenix, AZ 85018
(602) 840-1500

Intersection TMC: 1602976
Count Date: 5/18/2016

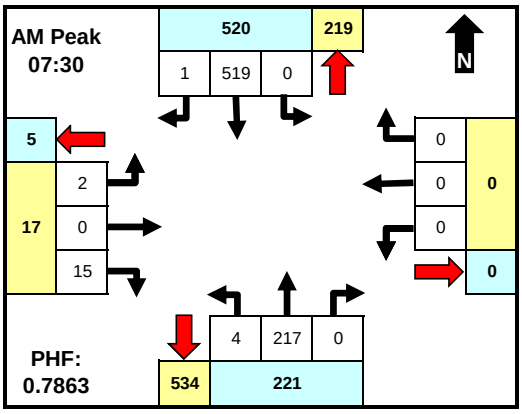

	From North				From East				From South				From West				INTSEC
	N WILLIAMSON VALLEY				LEVIE LN				N WILLIAMSON VALLEY				LEVIE LN				
Time	LT	Thru	RT	Ped	LT	Thru	RT	Ped	LT	Thru	RT	Ped	LT	Thru	RT	Ped	TOTAL
6:00	0	35	1	0	0	0	0	0	0	13	0	0	0	0	0	0	49
6:15	0	49	0	0	0	0	0	0	0	15	0	0	0	0	0	0	64
6:30	0	87	0	0	0	0	0	0	0	30	0	0	0	0	2	0	119
6:45	0	64	0	0	0	0	0	0	1	35	0	0	0	0	1	0	101
7:00	0	90	1	0	0	0	0	0	1	37	0	0	2	0	1	0	132
7:15	0	109	0	0	0	0	0	0	0	37	0	0	1	0	3	0	150
7:30	0	187	0	0	0	0	0	0	2	43	0	0	0	0	9	0	241
7:45	0	133	1	0	0	0	0	0	1	63	0	0	0	0	1	0	199
8:00	0	106	0	0	0	0	0	0	1	50	0	0	2	0	4	0	163
8:15	0	93	0	0	0	0	0	0	0	61	0	0	0	0	1	0	155
8:30	0	98	0	0	0	0	0	0	0	60	0	0	0	0	2	0	160
8:45	0	92	0	0	0	0	0	0	0	47	0	0	1	0	1	0	141
Total	0	1143	3	0	0	0	0	0	6	491	0	0	6	0	25	0	1674
Pk Hr																	7:30 AM
Pk Vol	0	519	1	0	0	0	0	0	4	217	0	0	2	0	15	0	758
PHF	0.000	0.694	0.250	0.000	0.000	0.000	0.000	0.000	0.500	0.861	0.000	0.000	0.250	0.000	0.417	0.000	0.786

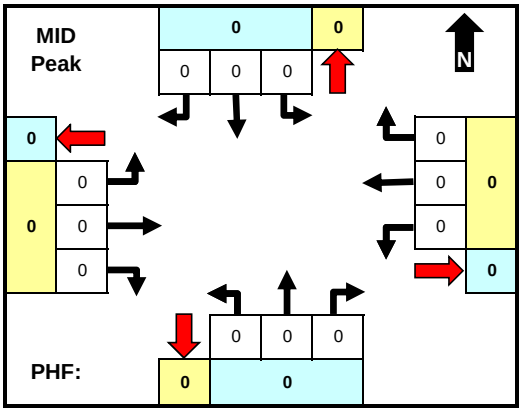

Time	LT	Thru	RT	Ped	LT	Thru	RT	Ped	LT	Thru	RT	Ped	LT	Thru	RT	Ped	TOTAL
Total	0	0	0	0	0	0	0	0	0	0	0	0	0	0	0	0	0
Pk Hr																	
Pk Vol																	
PHF																	

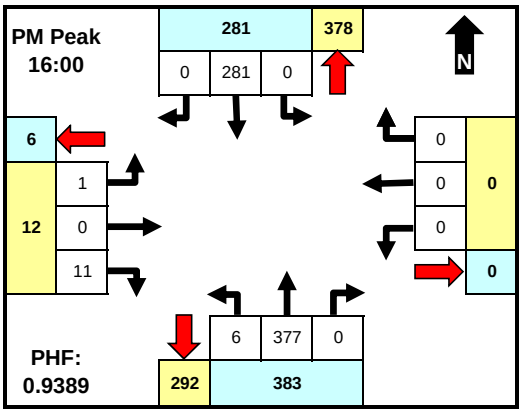

Time	LT	Thru	RT	Ped	LT	Thru	RT	Ped	LT	Thru	RT	Ped	LT	Thru	RT	Ped	TOTAL
15:30	0	74	2	0	0	0	0	0	0	92	0	0	1	0	0	0	169
15:45	0	64	0	0	0	0	0	0	1	89	0	0	1	0	1	0	156
16:00	0	77	0	0	0	0	0	0	2	100	0	0	0	0	1	0	180
16:15	0	79	0	0	0	0	0	0	3	83	0	0	0	0	4	0	169
16:30	0	70	0	0	0	0	0	0	0	91	0	0	1	0	4	0	166
16:45	0	55	0	0	0	0	0	0	1	103	0	0	0	0	2	0	161
17:00	0	57	2	0	0	0	0	0	2	100	0	0	0	0	2	0	163
17:15	0	42	0	0	0	0	0	0	2	106	0	0	0	0	1	0	151
17:30	0	37	0	0	0	0	0	0	2	96	0	0	0	0	1	0	136
17:45	0	37	0	0	0	0	0	0	2	83	0	0	1	0	2	0	125
18:00	0	44	0	0	0	0	0	0	2	68	0	0	0	0	0	0	114
18:15	0	36	0	0	0	0	0	0	4	72	0	0	0	0	2	0	114
Total	0	672	4	0	0	0	0	0	21	1083	0	0	4	0	20	0	1804
Pk Hr																	4:00 PM
Pk Vol	0	281	0	0	0	0	0	0	6	377	0	0	1	0	11	0	676
PHF	0.000	0.889	0.000	0.000	0.000	0.000	0.000	0.000	0.500	0.915	0.000	0.000	0.250	0.000	0.688	0.000	0.939

Intersection Statistics

Per	Peak Hour	Pk Hr Vol	Peak Intvl	Pk Intv Vol	PHF
AM	7:30 AM	758	7:30 AM	241	0.786
MID					
PM	4:00 PM	676	4:00 PM	180	0.939

Peak Hour Statistics by Approach

Per	Peak Hour	Vol	PHF	Peak Hour	Vol	PHF	Peak Hour	Vol	PHF	Peak Hour	Vol	PHF
AM	7:15 AM	536	0.717				7:45 AM	236	0.922	7:15 AM	20	0.556
MID												
PM	3:30 PM	296	0.937				4:45 PM	412	0.954	4:15 PM	13	0.650

Comments

Approach & Departure Volumes (No Peds)

Per	Approach	Depart	Approach	Depart	Approach	Depart	Approach	Depart
AM	1146	497	0	0	497	1168	31	9
MID	0	0	0	0	0	0	0	0
PM	676	1087	0	0	1104	692	24	25

TRAFFIC RESEARCH & ANALYSIS, INC.
Specializing in Traffic Data Collection

Traffic Research & Analysis, Inc.
3844 East Indian School Road
Phoenix, AZ 85018
(602) 840-1500

Intersection TMC: 1602977
Count Date: 5/18/2016

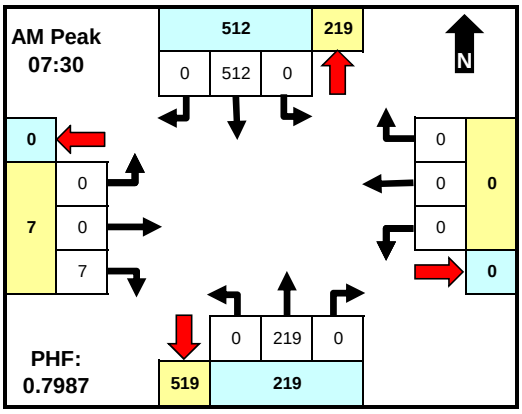

	From North				From East				From South				From West				INTSEC
	N WILLIAMSON VALLEY				MENDIBURO WAY				N WILLIAMSON VALLEY				MENDIBURO WAY				
Time	LT	Thru	RT	Ped	LT	Thru	RT	Ped	LT	Thru	RT	Ped	LT	Thru	RT	Ped	TOTAL
6:30	0	83	0	0	0	0	0	0	0	30	0	0	0	0	0	0	113
6:45	0	65	1	0	0	0	0	0	0	33	0	0	0	0	0	0	99
7:00	0	87	1	0	0	0	0	0	0	39	0	0	0	0	1	0	128
7:15	0	107	0	0	0	0	0	0	0	37	0	0	0	0	2	0	146
7:30	0	181	0	0	0	0	0	0	0	45	0	0	0	0	5	0	231
7:45	0	131	0	0	0	0	0	0	0	62	0	0	0	0	0	0	193
8:00	0	105	0	0	0	0	0	0	0	51	0	0	0	0	1	0	157
8:15	0	95	0	0	0	0	0	0	0	61	0	0	0	0	1	0	157
8:30	0	95	0	0	0	0	0	0	0	60	0	0	0	0	1	0	156
8:45	0	88	0	0	0	0	0	0	1	48	0	0	0	0	1	0	138
9:00	0	91	0	0	0	0	0	0	0	52	0	0	0	0	1	0	144
9:15	0	81	0	0	0	0	0	0	0	55	0	0	0	0	0	0	136
Total	0	1209	2	0	0	0	0	0	1	573	0	0	0	0	13	0	1798
Pk Hr																	7:30 AM
Pk Vol	0	512	0	0	0	0	0	0	0	219	0	0	0	0	7	0	738
PHF	0.000	0.707	0.000	0.000	0.000	0.000	0.000	0.000	0.000	0.883	0.000	0.000	0.000	0.000	0.350	0.000	0.799

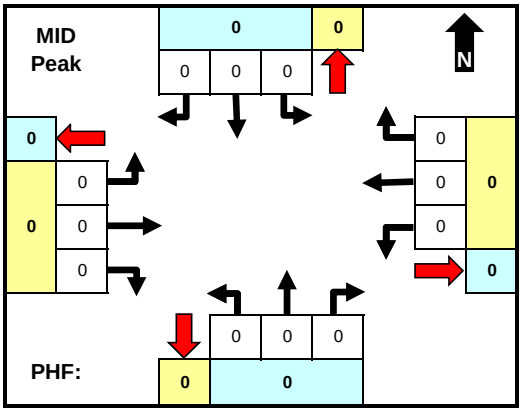

Time	LT	Thru	RT	Ped	LT	Thru	RT	Ped	LT	Thru	RT	Ped	LT	Thru	RT	Ped	TOTAL
Total	0	0	0	0	0	0	0	0	0	0	0	0	0	0	0	0	0
Pk Hr																	
Pk Vol																	
PHF																	

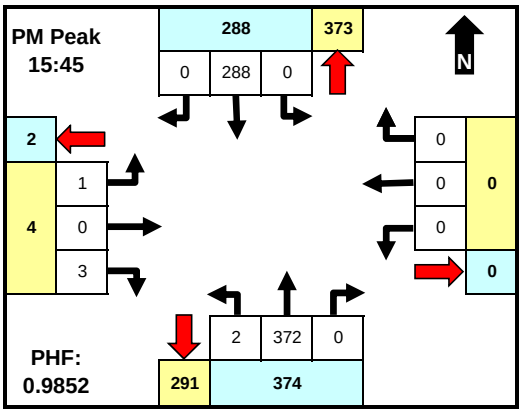

Time	LT	Thru	RT	Ped	LT	Thru	RT	Ped	LT	Thru	RT	Ped	LT	Thru	RT	Ped	TOTAL
15:30	0	69	0	0	0	0	0	0	1	80	0	0	0	0	2	0	152
15:45	0	68	0	0	0	0	0	0	0	100	0	0	0	0	0	0	168
16:00	0	73	0	0	0	0	0	0	0	94	0	0	0	0	0	0	167
16:15	0	76	0	0	0	0	0	0	2	82	0	0	0	0	2	0	162
16:30	0	71	0	0	0	0	0	0	0	96	0	0	1	0	1	0	169
16:45	0	53	0	0	0	0	0	0	1	98	0	0	0	0	0	0	152
17:00	0	60	0	0	0	0	0	0	0	94	0	0	0	0	1	0	155
17:15	0	40	0	0	0	0	0	0	1	110	0	0	0	0	1	0	152
17:30	0	37	0	0	0	0	0	0	2	89	0	0	0	0	0	0	128
17:45	0	35	0	0	0	0	0	0	3	83	0	0	0	0	0	0	121
18:00	0	41	0	0	0	0	0	0	0	65	0	0	0	0	0	0	106
18:15	0	35	0	0	0	0	0	0	2	74	0	0	0	0	1	0	112
Total	0	658	0	0	0	0	0	0	12	1065	0	0	1	0	8	0	1744
Pk Hr																	3:45 PM
Pk Vol	0	288	0	0	0	0	0	0	2	372	0	0	1	0	3	0	666
PHF	0.000	0.947	0.000	0.000	0.000	0.000	0.000	0.000	0.250	0.930	0.000	0.000	0.250	0.000	0.375	0.000	0.985

Intersection Statistics

Per	Peak Hour	Pk Hr Vol	Peak Intvl	Pk Intv Vol	PHF
AM	7:30 AM	738	7:30 AM	231	0.799
MID					
PM	3:45 PM	666	4:30 PM	169	0.985

Peak Hour Statistics by Approach

Per	Peak Hour	Vol	PHF	Peak Hour	Vol	PHF	Peak Hour	Vol	PHF	Peak Hour	Vol	PHF
AM	7:15 AM	524	0.724				7:45 AM	234	0.944	6:45 AM	8	0.400
MID												
PM	3:45 PM	288	0.947				4:30 PM	400	0.901	4:15 PM	5	0.625

Comments

Approach & Departure Volumes (No Peds)

Per	Approach	Depart	Approach	Depart	Approach	Depart	Approach	Depart
AM	1211	573	0	0	574	1222	13	3
MID	0	0	0	0	0	0	0	0
PM	658	1066	0	0	1077	666	9	12

TRAFFIC RESEARCH & ANALYSIS, INC.
Specializing in Traffic Data Collection

Traffic Research & Analysis, Inc.
3844 East Indian School Road
Phoenix, AZ 85018
(602) 840-1500

Intersection TMC: 1602978
Count Date: 5/19/2016

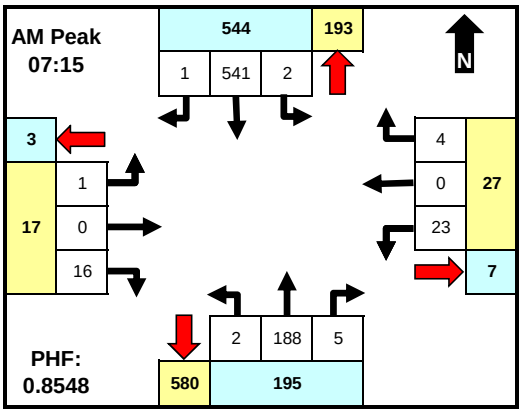

	From North				From East				From South				From West				INTSEC
	WILLIAMSON VALLEY R				SINGLE TREE ST				WILLIAMSON VALLEY R				SINGLE TREE ST				
Time	LT	Thru	RT	Ped	LT	Thru	RT	Ped	LT	Thru	RT	Ped	LT	Thru	RT	Ped	TOTAL
6:00	0	33	0	0	5	0	1	0	1	14	1	0	0	0	0	0	55
6:15	0	51	0	0	4	0	0	0	0	14	1	0	0	0	1	0	71
6:30	0	65	0	0	4	0	1	0	0	38	0	0	1	0	2	0	111
6:45	0	57	1	0	8	0	0	0	1	39	0	0	1	0	1	0	108
7:00	0	75	2	0	3	0	1	0	0	32	2	0	2	0	1	0	118
7:15	0	122	1	0	6	0	2	0	0	38	0	0	1	0	4	0	174
7:30	1	170	0	0	7	0	1	0	1	45	1	0	0	0	3	0	229
7:45	0	153	0	0	4	0	1	0	0	59	3	0	0	0	3	0	223
8:00	1	96	0	0	6	0	0	0	1	46	1	0	0	0	6	0	157
8:15	0	76	1	0	6	0	0	0	2	53	2	0	0	0	3	0	143
8:30	0	93	0	0	7	0	1	0	4	38	2	0	4	0	3	0	152
8:45	0	79	0	0	4	0	0	0	0	56	1	0	0	0	2	0	142
Total	2	1070	5	0	64	0	8	0	10	472	14	0	9	0	29	0	1683
Pk Hr																	7:15 AM
Pk Vol	2	541	1	0	23	0	4	0	2	188	5	0	1	0	16	0	783
PHF	0.500	0.796	0.250	0.000	0.821	0.000	0.500	0.000	0.500	0.797	0.417	0.000	0.250	0.000	0.667	0.000	0.855

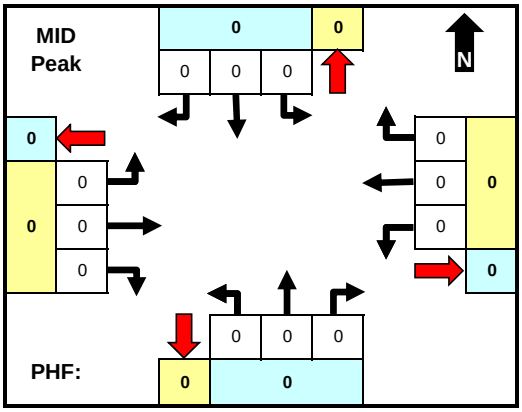

Time	LT	Thru	RT	Ped	LT	Thru	RT	Ped	LT	Thru	RT	Ped	LT	Thru	RT	Ped	TOTAL
Total	0	0	0	0	0	0	0	0	0	0	0	0	0	0	0	0	0
Pk Hr																	
Pk Vol																	
PHF																	

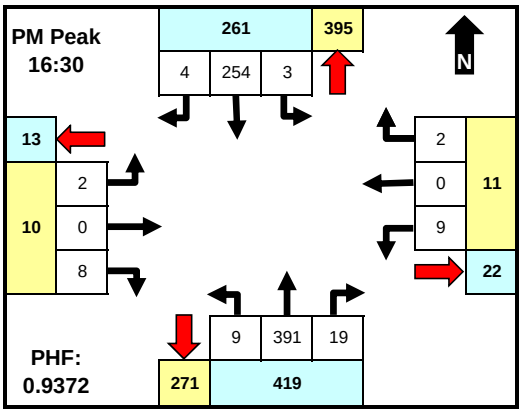

Time	LT	Thru	RT	Ped	LT	Thru	RT	Ped	LT	Thru	RT	Ped	LT	Thru	RT	Ped	TOTAL
15:30	0	71	1	0	4	0	1	0	2	101	1	0	0	0	0	0	181
15:45	1	57	0	0	9	0	0	0	2	86	2	0	0	0	1	0	158
16:00	0	60	0	0	5	0	0	0	1	90	1	0	0	0	0	0	157
16:15	0	55	1	0	1	0	1	0	4	89	7	0	1	0	1	0	160
16:30	2	58	2	0	3	0	0	0	5	108	1	0	0	0	3	0	182
16:45	0	53	0	0	2	0	1	0	2	83	6	0	0	0	2	0	149
17:00	1	75	2	0	2	0	0	0	1	93	5	0	1	0	3	0	183
17:15	0	68	0	0	2	0	1	0	1	107	7	0	1	0	0	0	187
17:30	1	57	0	0	3	0	1	0	4	90	1	0	0	0	2	0	159
17:45	2	45	0	0	2	0	0	0	3	61	11	0	0	0	0	0	124
18:00	0	49	0	0	0	0	1	0	5	63	6	0	0	0	3	0	127
18:15	1	36	0	0	2	0	1	0	6	49	3	0	1	0	0	0	99
Total	8	684	6	0	35	0	7	0	36	1020	51	0	4	0	15	0	1866
Pk Hr																	4:30 PM
Pk Vol	3	254	4	0	9	0	2	0	9	391	19	0	2	0	8	0	701
PHF	0.375	0.847	0.500	0.000	0.750	0.000	0.500	0.000	0.450	0.905	0.679	0.000	0.500	0.000	0.667	0.000	0.937

Intersection Statistics

Per	Peak Hour	Pk Hr Vol	Peak Intvl	Pk Intv Vol	PHF
AM	7:15 AM	783	7:30 AM	229	0.855
MID					
PM	4:30 PM	701	5:15 PM	187	0.937

Peak Hour Statistics by Approach

Per	Peak Hour	Vol	PHF	Peak Hour	Vol	PHF	Peak Hour	Vol	PHF	Peak Hour	Vol	PHF
AM	7:15 AM	544	0.795	6:45 AM	28	0.875	7:30 AM	214	0.863	7:45 AM	19	0.679
MID												
PM	4:30 PM	261	0.837	3:30 PM	21	0.583	4:30 PM	419	0.911	4:15 PM	11	0.688

Comments

Approach & Departure Volumes (No Peds)

Per	Approach	Depart	Approach	Depart	Approach	Depart	Approach	Depart
AM	1077	489	72	16	496	1163	38	15
MID	0	0	0	0	0	0	0	0
PM	698	1031	42	59	1107	734	19	42

TRAFFIC RESEARCH & ANALYSIS, INC.
Specializing in Traffic Data Collection

Traffic Research & Analysis, Inc.
3844 East Indian School Road
Phoenix, AZ 85018
(602) 840-1500

Intersection TMC: 1602980
Count Date: 5/19/2016

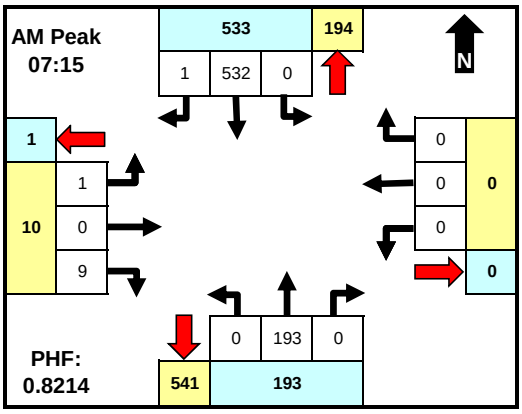

	From North				From East				From South				From West				INTSEC
	WILLIAMSON VALLEY R				LOVE LANE				WILLIAMSON VALLEY R				LOVE LANE				
Time	LT	Thru	RT	Ped	LT	Thru	RT	Ped	LT	Thru	RT	Ped	LT	Thru	RT	Ped	TOTAL
6:00	0	31	0	0	0	0	0	0	0	14	0	0	0	0	1	0	46
6:15	0	53	0	0	0	0	0	0	0	15	0	0	0	0	1	0	69
6:30	0	62	0	0	0	0	0	0	0	41	0	0	0	0	2	0	105
6:45	0	61	2	0	0	0	0	0	0	39	0	0	0	0	2	0	104
7:00	0	74	1	0	0	0	0	0	0	36	0	0	0	0	1	0	112
7:15	0	118	0	0	0	0	0	0	0	43	0	0	1	0	1	0	163
7:30	0	174	1	0	0	0	0	0	0	45	0	0	0	0	4	0	224
7:45	0	147	0	0	0	0	0	0	0	58	0	0	0	0	2	0	207
8:00	0	93	0	0	0	0	0	0	0	47	0	0	0	0	2	0	142
8:15	0	75	0	0	0	0	0	0	0	54	0	0	0	0	1	0	130
8:30	0	89	0	0	0	0	0	0	0	43	0	0	0	0	1	0	133
8:45	0	81	0	0	0	0	0	0	0	56	0	0	0	0	0	0	137
Total	0	1058	4	0	0	0	0	0	0	491	0	0	1	0	18	0	1572
Pk Hr																	7:15 AM
Pk Vol	0	532	1	0	0	0	0	0	0	193	0	0	1	0	9	0	736
PHF	0.000	0.764	0.250	0.000	0.000	0.000	0.000	0.000	0.000	0.832	0.000	0.000	0.250	0.000	0.563	0.000	0.821

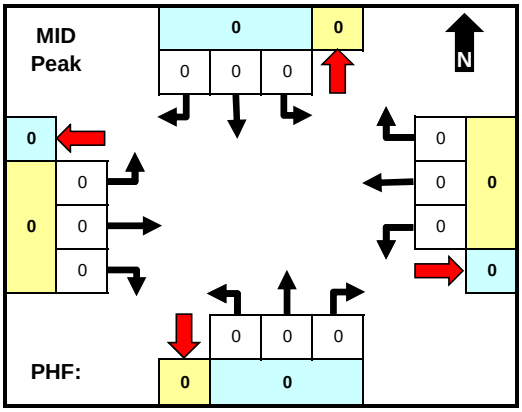

Time	LT	Thru	RT	Ped	LT	Thru	RT	Ped	LT	Thru	RT	Ped	LT	Thru	RT	Ped	TOTAL
Total	0	0	0	0	0	0	0	0	0	0	0	0	0	0	0	0	0
Pk Hr																	
Pk Vol																	
PHF																	

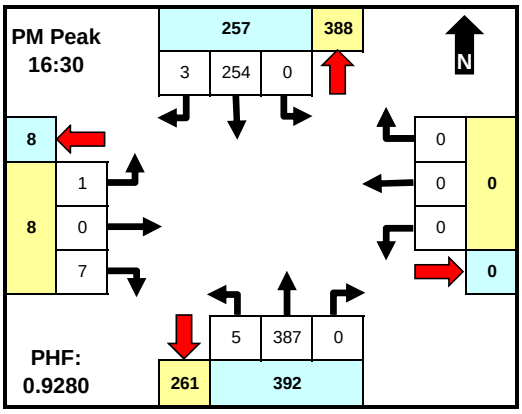

Time	LT	Thru	RT	Ped	LT	Thru	RT	Ped	LT	Thru	RT	Ped	LT	Thru	RT	Ped	TOTAL
15:30	0	68	0	0	0	0	0	0	1	97	0	0	0	0	1	0	167
15:45	0	56	0	0	0	0	0	0	2	85	0	0	0	0	0	0	143
16:00	0	58	0	0	0	0	0	0	0	89	0	0	0	0	0	0	147
16:15	0	55	1	0	0	0	0	0	0	91	0	0	0	0	0	0	147
16:30	0	60	0	0	0	0	0	0	2	109	0	0	0	0	1	0	172
16:45	0	54	1	0	0	0	0	0	1	82	0	0	0	0	1	0	139
17:00	0	75	1	0	0	0	0	0	1	90	0	0	0	0	2	0	169
17:15	0	65	1	0	0	0	0	0	1	106	0	0	1	0	3	0	177
17:30	0	62	0	0	0	0	0	0	1	91	0	0	1	0	1	0	156
17:45	0	46	1	0	0	0	0	0	1	56	0	0	0	0	0	0	104
18:00	0	46	1	0	0	0	0	0	0	65	0	0	0	0	1	0	113
18:15	0	42	1	0	0	0	0	0	0	49	0	0	1	0	0	0	93
Total	0	687	7	0	0	0	0	0	10	1010	0	0	3	0	10	0	1727
Pk Hr																	4:30 PM
Pk Vol	0	254	3	0	0	0	0	0	5	387	0	0	1	0	7	0	657
PHF	0.000	0.847	0.750	0.000	0.000	0.000	0.000	0.000	0.625	0.888	0.000	0.000	0.250	0.000	0.583	0.000	0.928

Intersection Statistics

Per	Peak Hour	Pk Hr Vol	Peak Intvl	Pk Intv Vol	PHF
AM	7:15 AM	736	7:30 AM	224	0.821
MID					
PM	4:30 PM	657	5:15 PM	177	0.928

Peak Hour Statistics by Approach

Per	Peak Hour	Vol	PHF	Peak Hour	Vol	PHF	Peak Hour	Vol	PHF	Peak Hour	Vol	PHF
AM	7:15 AM	533	0.761				7:30 AM	204	0.879	7:15 AM	10	0.625
MID												
PM	4:45 PM	259	0.852				4:30 PM	392	0.883	4:45 PM	9	0.563

Comments

Approach & Departure Volumes (No Peds)

Per	Approach	Depart	Approach	Depart	Approach	Depart	Approach	Depart
AM	1062	492	0	0	491	1076	19	4
MID	0	0	0	0	0	0	0	0
PM	694	1013	0	0	1020	697	13	17

TRAFFIC RESEARCH & ANALYSIS, INC.
Specializing in Traffic Data Collection

Traffic Research & Analysis, Inc.
3844 East Indian School Road
Phoenix, AZ 85018
(602) 840-1500

Intersection TMC: 1602981
Count Date: 5/19/2016

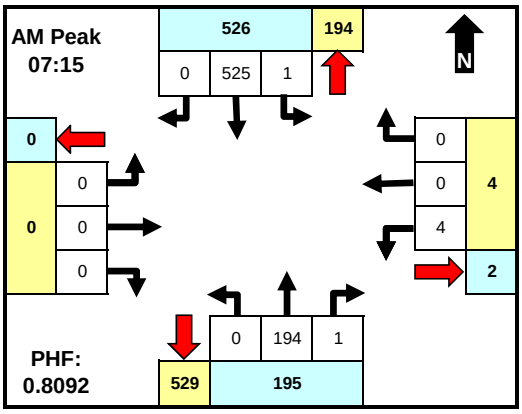

	From North				From East				From South				From West				INTSEC
	WILLIAMSON VALLEY R				SHANE DR				WILLIAMSON VALLEY R				SHANE DR				
Time	LT	Thru	RT	Ped	LT	Thru	RT	Ped	LT	Thru	RT	Ped	LT	Thru	RT	Ped	TOTAL
6:00	0	32	0	0	0	0	1	0	0	13	0	0	0	0	0	0	46
6:15	0	53	0	0	2	0	0	0	0	13	0	0	0	0	0	0	68
6:30	0	62	0	0	0	0	0	0	0	40	0	0	0	0	0	0	102
6:45	0	60	0	0	0	0	0	0	0	39	0	0	0	0	0	0	99
7:00	1	81	0	0	0	0	0	0	0	33	2	0	0	0	0	0	117
7:15	0	120	0	0	2	0	0	0	0	49	0	0	0	0	0	0	171
7:30	0	183	0	0	1	0	0	0	0	40	0	0	0	0	0	0	224
7:45	0	132	0	0	0	0	0	0	0	57	0	0	0	0	0	0	189
8:00	1	90	0	0	1	0	0	0	0	48	1	0	0	0	0	0	141
8:15	0	70	0	0	1	0	1	0	0	50	2	0	0	0	0	0	124
8:30	0	90	0	0	0	0	0	0	0	48	0	0	0	0	0	0	138
8:45	0	84	0	0	2	0	0	0	0	49	1	0	0	0	0	0	136
Total	2	1057	0	0	9	0	2	0	0	479	6	0	0	0	0	0	1555
Pk Hr																	7:15 AM
Pk Vol	1	525	0	0	4	0	0	0	0	194	1	0	0	0	0	0	725
PHF	0.250	0.717	0.000	0.000	0.500	0.000	0.000	0.000	0.000	0.851	0.250	0.000	0.000	0.000	0.000	0.000	0.809

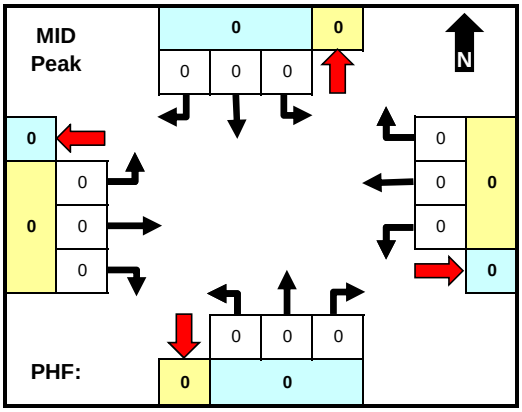

Time	LT	Thru	RT	Ped	LT	Thru	RT	Ped	LT	Thru	RT	Ped	LT	Thru	RT	Ped	TOTAL
Total	0	0	0	0	0	0	0	0	0	0	0	0	0	0	0	0	0
Pk Hr																	
Pk Vol																	
PHF																	

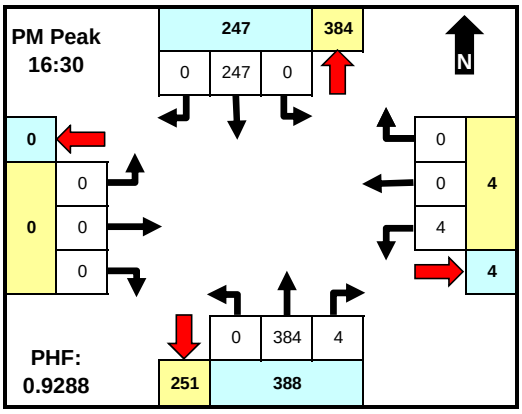

Time	LT	Thru	RT	Ped	LT	Thru	RT	Ped	LT	Thru	RT	Ped	LT	Thru	RT	Ped	TOTAL
15:30	0	62	0	0	0	0	0	0	0	96	2	0	0	0	0	0	160
15:45	0	54	0	0	1	0	0	0	0	78	2	0	0	0	0	0	135
16:00	0	57	0	0	2	0	0	0	0	88	1	0	0	0	0	0	148
16:15	1	61	0	0	2	0	1	0	0	88	5	0	0	0	0	0	158
16:30	0	55	0	0	0	0	0	0	0	108	1	0	0	0	0	0	164
16:45	0	51	0	0	1	0	0	0	0	82	0	0	0	0	0	0	134
17:00	0	75	0	0	2	0	0	0	0	93	2	0	0	0	0	0	172
17:15	0	66	0	0	1	0	0	0	0	101	1	0	0	0	0	0	169
17:30	0	61	0	0	0	0	0	0	0	89	1	0	0	0	0	0	151
17:45	0	48	0	0	2	0	1	0	0	60	0	0	0	0	0	0	111
18:00	0	44	0	0	1	0	0	0	0	62	0	0	0	0	0	0	107
18:15	0	39	0	0	0	0	0	0	0	46	1	0	0	0	0	0	86
Total	1	673	0	0	12	0	2	0	0	991	16	0	0	0	0	0	1695
Pk Hr																	4:30 PM
Pk Vol	0	247	0	0	4	0	0	0	0	384	4	0	0	0	0	0	639
PHF	0.000	0.823	0.000	0.000	0.500	0.000	0.000	0.000	0.000	0.889	0.500	0.000	0.000	0.000	0.000	0.000	0.929

Intersection Statistics

Per	Peak Hour	Pk Hr Vol	Peak Intvl	Pk Intv Vol	PHF
AM	7:15 AM	725	7:30 AM	224	0.809
MID					
PM	4:30 PM	639	5:00 PM	172	0.929

Peak Hour Statistics by Approach

Per	Peak Hour	Vol	PHF	Peak Hour	Vol	PHF	Peak Hour	Vol	PHF	Peak Hour	Vol	PHF
AM	7:15 AM	526	0.719	8:00 AM	5	0.625	7:45 AM	206	0.904			
MID												
PM	4:45 PM	253	0.843	3:30 PM	6	0.500	4:30 PM	388	0.890			

Comments

Approach & Departure Volumes (No Peds)

Per	Approach	Depart	Approach	Depart	Approach	Depart	Approach	Depart
AM	1059	481	11	8	485	1066	0	0
MID	0	0	0	0	0	0	0	0
PM	674	993	14	17	1007	685	0	0

TRAFFIC RESEARCH & ANALYSIS, INC.
Specializing in Traffic Data Collection

Traffic Research & Analysis, Inc.
3844 East Indian School Road
Phoenix, AZ 85018
(602) 840-1500

Intersection TMC: 1602982
Count Date: 5/19/2016

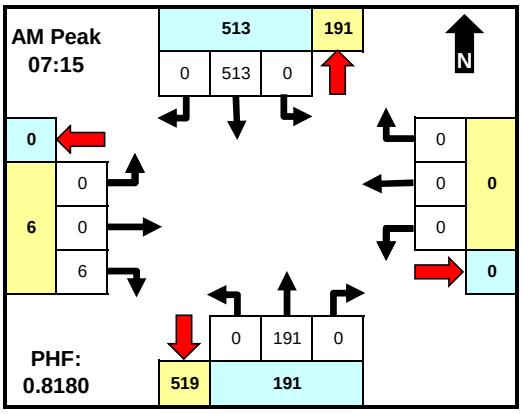

	From North				From East				From South				From West				INTSEC
	WILLIAMSON VALLY RD				GRANITE PARK DR				WILLIAMSON VALLY RD				GRANITE PARK DR				
Time	LT	Thru	RT	Ped	LT	Thru	RT	Ped	LT	Thru	RT	Ped	LT	Thru	RT	Ped	TOTAL
6:00	0	29	0	0	0	0	0	0	0	17	0	0	0	0	0	0	46
6:15	0	51	0	0	0	0	0	0	0	13	0	0	0	0	1	0	65
6:30	0	59	0	0	0	0	0	0	0	40	0	0	0	0	1	0	100
6:45	0	58	0	0	0	0	0	0	0	39	0	0	0	0	1	0	98
7:00	0	84	0	0	0	0	0	0	0	34	0	0	0	0	0	0	118
7:15	0	115	0	0	0	0	0	0	0	44	0	0	0	0	2	0	161
7:30	0	172	0	0	0	0	0	0	0	44	0	0	0	0	1	0	217
7:45	0	141	0	0	0	0	0	0	0	58	0	0	0	0	1	0	200
8:00	0	85	0	0	0	0	0	0	0	45	0	0	0	0	2	0	132
8:15	0	70	0	0	0	0	0	0	2	48	0	0	0	0	0	0	120
8:30	0	86	0	0	0	0	0	0	0	43	0	0	0	0	1	0	130
8:45	0	82	0	0	0	0	0	0	0	54	0	0	0	0	0	0	136
Total	0	1032	0	0	0	0	0	0	2	479	0	0	0	0	10	0	1523
Pk Hr																	7:15 AM
Pk Vol	0	513	0	0	0	0	0	0	0	191	0	0	0	0	6	0	710
PHF	0.000	0.746	0.000	0.000	0.000	0.000	0.000	0.000	0.000	0.823	0.000	0.000	0.000	0.000	0.750	0.000	0.818

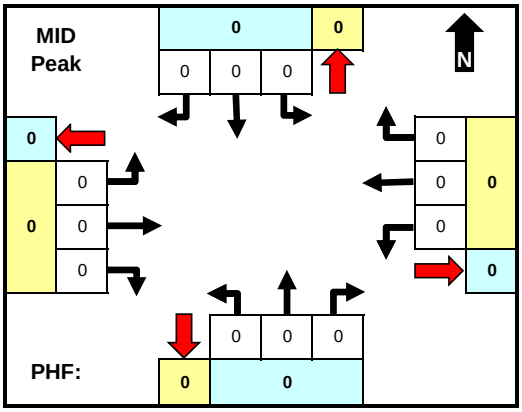

Time	LT	Thru	RT	Ped	LT	Thru	RT	Ped	LT	Thru	RT	Ped	LT	Thru	RT	Ped	TOTAL
Total	0	0	0	0	0	0	0	0	0	0	0	0	0	0	0	0	0
Pk Hr																	
Pk Vol																	
PHF																	

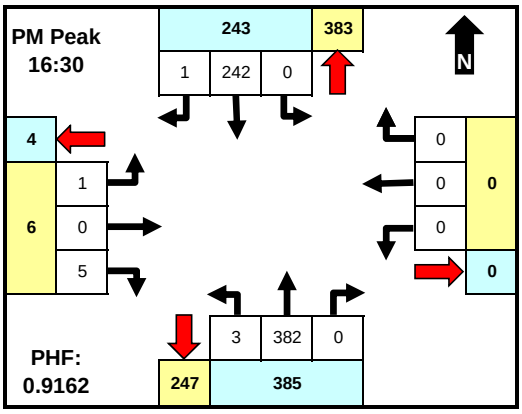

Time	LT	Thru	RT	Ped	LT	Thru	RT	Ped	LT	Thru	RT	Ped	LT	Thru	RT	Ped	TOTAL
15:30	0	66	0	0	0	0	0	0	0	87	0	0	0	0	0	0	153
15:45	0	53	1	0	0	0	0	0	0	86	0	0	0	0	0	0	140
16:00	0	53	1	0	0	0	0	0	1	87	0	0	0	0	1	0	143
16:15	0	57	0	0	0	0	0	0	2	85	0	0	0	0	2	0	146
16:30	0	57	0	0	0	0	0	0	0	104	0	0	0	0	1	0	162
16:45	0	53	1	0	0	0	0	0	1	82	0	0	0	0	0	0	137
17:00	0	69	0	0	0	0	0	0	2	88	0	0	1	0	2	0	162
17:15	0	63	0	0	0	0	0	0	0	108	0	0	0	0	2	0	173
17:30	0	60	0	0	0	0	0	0	2	83	0	0	0	0	0	0	145
17:45	0	45	0	0	0	0	0	0	0	59	0	0	0	0	0	0	104
18:00	0	44	0	0	0	0	0	0	2	61	0	0	0	0	0	0	107
18:15	0	39	1	0	0	0	0	0	2	46	0	0	0	0	0	0	88
Total	0	659	4	0	0	0	0	0	12	976	0	0	1	0	8	0	1660
Pk Hr																	4:30 PM
Pk Vol	0	242	1	0	0	0	0	0	3	382	0	0	1	0	5	0	634
PHF	0.000	0.877	0.250	0.000	0.000	0.000	0.000	0.000	0.375	0.884	0.000	0.000	0.250	0.000	0.625	0.000	0.916

Intersection Statistics

Per	Peak Hour	Pk Hr Vol	Peak Intvl	Pk Intv Vol	PHF
AM	7:15 AM	710	7:30 AM	217	0.818
MID					
PM	4:30 PM	634	5:15 PM	173	0.916

Peak Hour Statistics by Approach

Per	Peak Hour	Vol	PHF	Peak Hour	Vol	PHF	Peak Hour	Vol	PHF	Peak Hour	Vol	PHF
AM	7:15 AM	513	0.746				7:30 AM	197	0.849	7:15 AM	6	0.750
MID												
PM	4:45 PM	246	0.891				4:30 PM	385	0.891	4:15 PM	6	0.500

Comments

Approach & Departure Volumes (No Peds)

Per	Approach	Depart	Approach	Depart	Approach	Depart	Approach	Depart
AM	1032	479	0	0	481	1042	10	2
MID	0	0	0	0	0	0	0	0
PM	663	977	0	0	988	667	9	16

TRAFFIC RESEARCH & ANALYSIS, INC.
Specializing in Traffic Data Collection

Traffic Research & Analysis, Inc.
3844 East Indian School Road
Phoenix, AZ 85018
(602) 840-1500

Intersection TMC: 1602983
Count Date: 5/19/2016

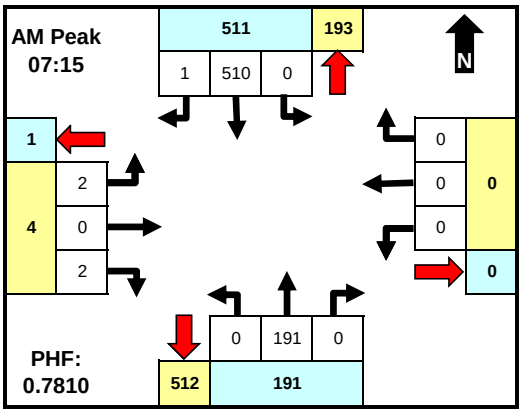

	From North				From East				From South				From West				INTSEC
	WILLIAMSON VALLEY R				GRANITE VISTA				WILLIAMSON VALLEY R				GRANITE VISTA				
Time	LT	Thru	RT	Ped	LT	Thru	RT	Ped	LT	Thru	RT	Ped	LT	Thru	RT	Ped	TOTAL
6:00	0	32	0	0	0	0	0	0	0	15	0	0	0	0	0	0	47
6:15	0	49	0	0	0	0	0	0	0	13	0	0	0	0	1	0	63
6:30	0	59	0	0	0	0	0	0	0	41	0	0	0	0	1	0	101
6:45	0	59	0	0	0	0	0	0	0	39	0	0	0	0	0	0	98
7:00	0	80	3	0	0	0	0	0	0	33	0	0	2	0	1	0	119
7:15	0	121	0	0	0	0	0	0	0	43	0	0	0	0	1	0	165
7:30	0	178	1	0	0	0	0	0	0	46	0	0	1	0	0	0	226
7:45	0	125	0	0	0	0	0	0	0	57	0	0	0	0	1	0	183
8:00	0	86	0	0	0	0	0	0	0	45	0	0	1	0	0	0	132
8:15	0	68	1	0	0	0	0	0	0	50	0	0	0	0	1	0	120
8:30	0	89	0	0	0	0	0	0	0	43	0	0	0	0	1	0	133
8:45	0	84	1	0	0	0	0	0	0	55	0	0	0	0	0	0	140
Total	0	1030	6	0	0	0	0	0	0	480	0	0	4	0	7	0	1527
Pk Hr																	7:15 AM
Pk Vol	0	510	1	0	0	0	0	0	0	191	0	0	2	0	2	0	706
PHF	0.000	0.716	0.250	0.000	0.000	0.000	0.000	0.000	0.000	0.838	0.000	0.000	0.500	0.000	0.500	0.000	0.781

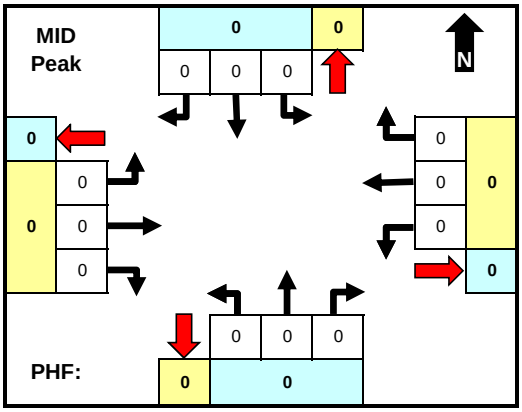

Time	LT	Thru	RT	Ped	LT	Thru	RT	Ped	LT	Thru	RT	Ped	LT	Thru	RT	Ped	TOTAL
Total	0	0	0	0	0	0	0	0	0	0	0	0	0	0	0	0	0
Pk Hr																	
Pk Vol																	
PHF																	

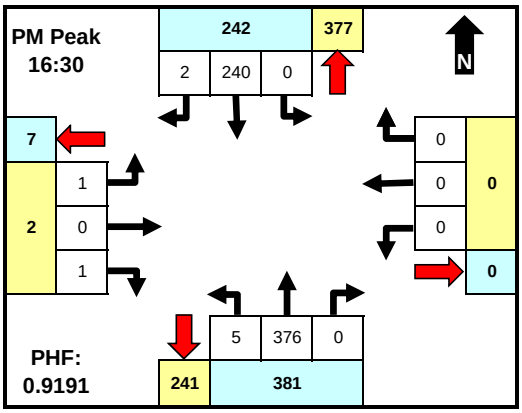

Time	LT	Thru	RT	Ped	LT	Thru	RT	Ped	LT	Thru	RT	Ped	LT	Thru	RT	Ped	TOTAL
15:30	0	61	0	0	0	0	0	0	0	97	0	0	0	0	0	0	158
15:45	0	56	0	0	0	0	0	0	0	81	0	0	0	0	0	0	137
16:00	0	55	0	0	0	0	0	0	1	85	0	0	0	0	0	0	141
16:15	0	59	0	0	0	0	0	0	4	82	0	0	0	0	1	0	146
16:30	0	53	0	0	0	0	0	0	1	103	0	0	0	0	0	0	157
16:45	0	54	0	0	0	0	0	0	2	81	0	0	0	0	0	0	137
17:00	0	71	0	0	0	0	0	0	1	89	0	0	0	0	0	0	161
17:15	0	62	2	0	0	0	0	0	1	103	0	0	1	0	1	0	170
17:30	0	62	0	0	0	0	0	0	0	86	0	0	0	0	0	0	148
17:45	0	48	0	0	0	0	0	0	1	57	0	0	1	0	0	0	107
18:00	0	43	0	0	0	0	0	0	0	61	0	0	0	0	2	0	106
18:15	0	42	0	0	0	0	0	0	0	45	0	0	0	0	0	0	87
Total	0	666	2	0	0	0	0	0	11	970	0	0	2	0	4	0	1655
Pk Hr																	4:30 PM
Pk Vol	0	240	2	0	0	0	0	0	5	376	0	0	1	0	1	0	625
PHF	0.000	0.845	0.250	0.000	0.000	0.000	0.000	0.000	0.625	0.913	0.000	0.000	0.250	0.000	0.250	0.000	0.919

Intersection Statistics

Per	Peak Hour	Pk Hr Vol	Peak Intvl	Pk Intv Vol	PHF
AM	7:15 AM	706	7:30 AM	226	0.781
MID					
PM	4:30 PM	625	5:15 PM	170	0.919

Peak Hour Statistics by Approach

Per	Peak Hour	Vol	PHF	Peak Hour	Vol	PHF	Peak Hour	Vol	PHF	Peak Hour	Vol	PHF
AM	7:15 AM	511	0.714				7:30 AM	198	0.868	7:00 AM	6	0.500
MID												
PM	4:45 PM	251	0.884				4:30 PM	381	0.916	5:15 PM	5	0.625

Comments

Approach & Departure Volumes (No Peds)

Per	Approach	Depart	Approach	Depart	Approach	Depart	Approach	Depart
AM	1036	484	0	0	480	1037	11	6
MID	0	0	0	0	0	0	0	0
PM	668	972	0	0	981	670	6	13

TRAFFIC RESEARCH & ANALYSIS, INC.
Specializing in Traffic Data Collection

Traffic Research & Analysis, Inc.
3844 East Indian School Road
Phoenix, AZ 85018
(602) 840-1500

Intersection TMC: 1602963
Count Date: 4/7/2016

N WILLIAMSON VALLEY RD & W GLENSHANDRA DR

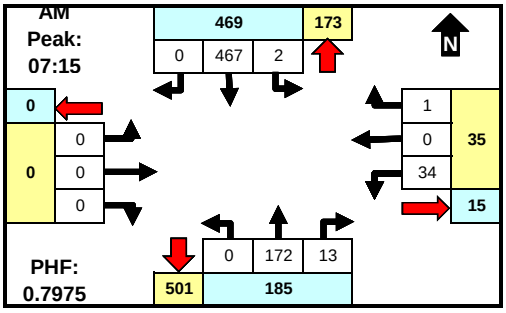

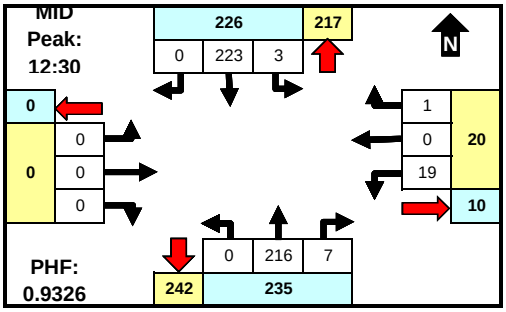

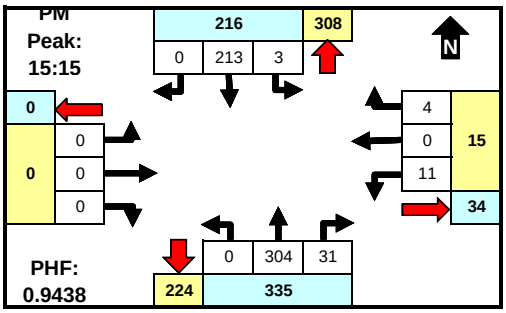

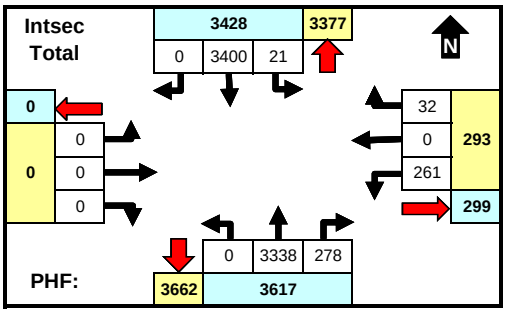

Comments

MID period defined as 10:00 AM - 2:00 PM. Peaks defined based on total intersection volume for all vehicle types.

	From North				From East				From South				From West				INTSEC
	N WILLIAMSON VALLEY				W GLENSHANDRA DR				N WILLIAMSON VALLEY				W GLENSHANDRA DR				
Time	LT	Thru	RT	U	LT	Thru	RT	U	LT	Thru	RT	U	LT	Thru	RT	U	TOTAL
00:00	0	2	0	0	0	0	0	0	0	3	1	0	0	0	0	0	6
00:15	0	1	0	0	0	0	0	0	0	3	0	0	0	0	0	0	4
00:30	0	0	0	0	0	0	0	0	0	4	0	0	0	0	0	0	4
00:45	0	0	0	0	0	0	0	0	0	3	0	0	0	0	0	0	3
01:00	0	1	0	0	0	0	0	0	0	0	0	0	0	0	0	0	1
01:15	0	2	0	0	0	0	0	0	0	1	0	0	0	0	0	0	3
01:30	0	0	0	0	0	0	0	0	0	2	0	0	0	0	0	0	2
01:45	0	0	0	0	0	0	0	0	0	2	0	0	0	0	0	0	2
02:00	0	1	0	0	0	0	0	0	0	3	0	0	0	0	0	0	4
02:15	0	2	0	0	0	0	0	0	0	1	0	0	0	0	0	0	3
02:30	0	3	0	0	0	0	0	0	0	1	0	0	0	0	0	0	4
02:45	0	1	0	0	0	0	0	0	0	1	0	0	0	0	0	0	2
03:00	0	0	0	0	0	0	0	0	0	1	0	0	0	0	0	0	1
03:15	0	0	0	0	0	0	0	0	0	2	0	0	0	0	0	0	2
03:30	0	1	0	0	0	0	0	0	0	1	0	0	0	0	0	0	2
03:45	0	2	0	0	0	0	0	0	0	0	0	0	0	0	0	0	2
04:00	0	2	0	0	1	0	0	0	0	0	1	0	0	0	0	0	4
04:15	0	3	0	0	3	0	0	0	0	2	0	0	0	0	0	0	8
04:30	0	3	0	0	1	0	0	0	0	3	0	0	0	0	0	0	7
04:45	0	3	0	0	0	0	0	0	0	3	1	0	0	0	0	0	7
05:00	0	14	0	0	2	0	0	0	0	3	0	0	0	0	0	0	19
05:15	0	7	0	0	0	0	0	0	0	2	0	0	0	0	0	0	9
05:30	0	14	0	0	0	0	0	0	0	4	1	0	0	0	0	0	19
05:45	0	23	0	0	3	0	0	0	0	6	0	0	0	0	0	0	32
06:00	0	28	0	0	1	0	0	0	0	10	2	0	0	0	0	0	41
06:15	0	40	0	0	3	0	1	0	0	13	1	0	0	0	0	0	58
06:30	0	51	0	0	4	0	0	0	0	31	0	0	0	0	0	0	86
06:45	0	54	0	0	2	0	1	0	0	32	1	0	0	0	0	0	90
07:00	0	66	0	0	11	0	0	0	0	34	5	0	0	0	0	0	116
07:15	0	107	0	0	4	0	0	0	0	37	3	0	0	0	0	0	151
07:30	1	158	0	0	12	0	0	0	0	44	1	0	0	0	0	0	216
07:45	0	121	0	0	11	0	1	0	0	49	5	0	0	0	0	0	187
08:00	1	81	0	0	7	0	0	0	0	42	4	0	0	0	0	0	135
08:15	0	70	0	0	7	0	1	0	0	49	1	0	0	0	0	0	128
08:30	0	75	0	0	14	0	0	0	0	40	5	0	0	0	0	0	134
08:45	0	72	0	0	8	0	1	0	0	52	5	0	0	0	0	0	138
09:00	1	78	0	0	9	0	1	0	0	46	6	0	0	0	0	0	141
09:15	1	75	0	0	9	0	3	0	0	37	3	0	0	0	0	0	128
09:30	0	81	0	0	6	0	0	0	0	42	5	0	0	0	0	0	134
09:45	0	74	0	0	8	0	0	0	0	63	1	0	0	0	0	0	146
10:00	0	63	0	0	3	0	1	0	0	46	5	0	0	0	0	0	118
10:15	2	67	0	0	7	0	1	0	0	49	5	0	0	0	0	0	131
10:30	0	73	0	0	6	0	0	0	0	31	4	0	0	0	0	0	114
10:45	0	70	0	0	6	0	0	0	0	49	3	0	0	0	0	0	128
11:00	0	53	0	0	7	0	0	0	0	51	5	0	0	0	0	0	116
11:15	1	61	0	0	4	0	0	0	0	55	8	0	0	0	0	0	129
11:30	1	55	0	0	4	0	0	0	0	59	4	0	0	0	0	0	123
11:45	1	59	0	0	4	0	0	0	0	61	3	0	0	0	0	0	128
12:00	0	48	0	0	7	0	1	0	0	41	4	0	0	0	0	0	101
12:15	1	53	0	0	7	0	0	0	0	60	4	0	0	0	0	0	125
12:30	0	62	0	0	5	0	0	0	0	59	4	0	0	0	0	0	130
12:45	1	56	0	0	6	0	1	0	0	72	5	0	0	0	0	0	141
13:00	0	49	0	0	3	0	1	0	0	68	5	0	0	0	0	0	126
13:15	0	54	0	0	0	0	2	0	0	68	5	0	0	0	0	0	129
13:30	0	52	0	0	6	0	0	0	0	60	4	0	0	0	0	0	122
13:45	0	49	0	0	4	0	0	0	0	59	5	0	0	0	0	0	117
14:00	0	59	0	0	5	0	0	0	0	76	5	0	0	0	0	0	145
14:15	0	50	0	0	3	0	0	0	0	73	8	0	0	0	0	0	134
14:30	0	58	0	0	0	0	0	0	0	60	2	0	0	0	0	0	120
14:45	0	60	0	0	1	0	0	0	0	74	10	0	0	0	0	0	145
15:00	0	48	0	0	2	0	0	0	0	73	6	0	0	0	0	0	129
15:15	0	68	0	0	4	0	0	0	0	83	5	0	0	0	0	0	160
15:30	0	65	0	0	2	0	0	0	0	82	10	0	0	0	0	0	159
15:45	0	51	0	0	5	0	0	0	0	84	2	0	0	0	0	0	142
16:00	2	50	0	0	4	0	2	0	0	78	7	0	0	0	0	0	143
16:15	0	49	0	0	1	0	0	0	0	78	2	0	0	0	0	0	130
16:30	1	53	0	0	2	0	1	0	0	87	13	0	0	0	0	0	157
16:45	1	45	0	0	5	0	1	0	0	66	10	0	0	0	0	0	128
17:00	1	66	0	0	3	0	2	0	0	73	6	0	0	0	0	0	151
17:15	1	59	0	0	5	0	0	0	0	77	6	0	0	0	0	0	148
17:30	0	54	0	0	4	0	1	0	0	74	3	0	0	0	0	0	136
17:45	0	41	0	0	5	0	1	0	0	56	5	0	0	0	0	0	108
18:00	1	45	0	1	0	0	2	0	0	50	8	0	0	0	0	0	107
18:15	0	38	0	1	0	0	0	0	0	44	2	0	0	0	0	0	85
18:30	0	35	0	2	0	0	0	0	0	52	2	0	0	0	0	0	91
18:45	1	15	0	1	0	0	1	0	0	49	3	0	0	0	0	0	70
19:00	0	19	0	1	0	0	1	0	0	44	2	0	0	0	0	0	67
19:15	0	15	0	1	0	0	0	0	0	36	5	0	0	0	0	0	57
19:30	0	15	0	0	0	0	0	0	0	30	5	0	0	0	0	0	50
19:45	0	14	0	0	0	0	0	0	0	34	4	1	0	0	0	0	53
20:00	0	6	0	0	1	0	0	0	0	27	3	0	0	0	0	0	37
20:15	1	16	0	0	0	0	0	0	0	37	4	0	0	0	0	0	58
20:30	0	11	0	0	0	0	0	0	0	33	2	0	0	0	0	0	46
20:45	0	13	0	0	0	0	0	0	0	25	1	0	0	0	0	0	39
21:00	0	9	0	0	0	0	1	0	0	14	1	0	0	0	0	0	25
21:15	0	11	0	0	1	0	0	0	0	21	2	0	0	0	0	0	35
21:30	0	4	0	0	1	0	0	0	0	16	4	0	0	0	0	0	25
21:45	0	3	0	0	0	0	0	0	0	15	0	0	0	0	0	0	18
22:00	0	2	0	0	0	0	0	0	0	7	0	0	0	0	0	0	9
22:15	0	2	0	0	0	0	0	0	0	18	0	0	0	0	0	0	20
22:30	0	2	0	0	0	0	1	0	0	16	2	0	0	0	0	0	21
22:45	0	4	0	0	0	0	0	0	0	6	2	0	0	0	0	0	12
23:00	0	1	0	0	1	0	0	0	0	3	0	0	0	0	0	0	5
23:15	0	2	0	0	1	0	2	0	0	2	0	0	0	0	0	0	7
23:30	0	2	0	0	0	0	0	0	0	2	0	0	0	0	0	0	4
23:45	1	0	0	0	0	0	0	0	0	3	1	0	0	0	0	0	5
Total	21	3400	0	7	261	0	32	0	0	3338	278	1	0	0	0	0	7338
AM Peak Hr:																	7:15
Pk Vol	2	467	0	0	34	0	1	0	0	172	13	0	0	0	0	0	689
PHF	2.000	1.353	n/a	n/a	1.412	n/a	4.000	n/a	n/a	1.140	1.538	n/a	n/a	n/a	n/a	n/a	0.797
MID Peak Hr:																	12:30
Pk Vol	3	223	0	0	19	0	1	0	0	216	19	0	0	0	0	0	526
PHF	0.750	0.914	n/a	n/a	0.679	n/a	0.250	n/a	n/a	0.885	0.594	n/a	n/a	n/a	n/a	n/a	0.933
PM Peak Hr:																	15:15
Pk Vol	3	213	0	0	11	0	4	0	0	304	31	0	0	0	0	0	604
PHF	0.750	0.807	n/a	n/a	0.550	n/a	0.500	n/a	n/a	0.874	0.596	n/a	n/a	n/a	n/a	n/a	0.944

TRAFFIC RESEARCH & ANALYSIS, INC.
Specializing in Traffic Data Collection

Traffic Research & Analysis, Inc.
3844 East Indian School Road
Phoenix, AZ 85018
(602) 840-1500

Intersection TMC: 1602984
Count Date: 5/18/2016

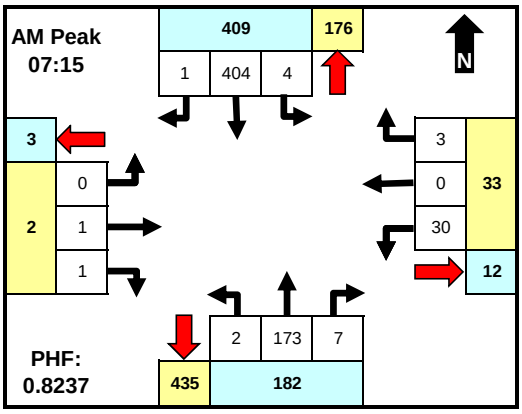

	From North				From East				From South				From West				INTSEC
	N WILLIAMSON VALLEY				GRANITE OAKS DR				N WILLIAMSON VALLEY				GRANITE OAKS DR				
Time	LT	Thru	RT	Ped	LT	Thru	RT	Ped	LT	Thru	RT	Ped	LT	Thru	RT	Ped	TOTAL
6:00	1	29	1	0	2	0	1	0	0	11	0	0	0	0	0	0	45
6:15	0	37	0	0	4	0	0	0	0	12	2	0	0	0	0	0	55
6:30	0	57	0	0	5	0	0	0	0	33	1	0	0	0	0	0	96
6:45	2	47	0	0	6	0	1	0	1	33	2	0	1	0	0	0	93
7:00	0	74	0	0	2	0	4	0	0	32	4	0	1	0	0	0	117
7:15	1	84	0	0	3	0	2	0	0	34	1	0	0	0	0	0	125
7:30	0	137	0	0	11	0	0	0	0	42	0	0	0	0	0	0	190
7:45	3	102	0	0	6	0	1	0	2	54	3	0	0	1	0	0	172
8:00	0	81	1	0	10	0	0	0	0	43	3	0	0	0	1	0	139
8:15	1	58	0	0	12	0	2	0	0	44	4	0	0	0	0	0	121
8:30	0	61	1	0	15	0	1	0	1	48	2	0	0	0	0	0	129
8:45	1	64	1	0	9	0	1	0	0	40	4	0	0	0	1	0	121
Total	9	831	4	0	85	0	13	0	4	426	26	0	2	1	2	0	1403
Pk Hr																	7:15 AM
Pk Vol	4	404	1	0	30	0	3	0	2	173	7	0	0	1	1	0	626
PHF	0.333	0.737	0.250	0.000	0.682	0.000	0.375	0.000	0.250	0.801	0.583	0.000	0.000	0.250	0.250	0.000	0.824

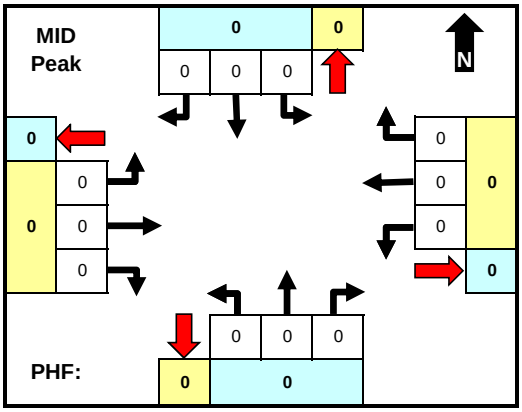

Time	LT	Thru	RT	Ped	LT	Thru	RT	Ped	LT	Thru	RT	Ped	LT	Thru	RT	Ped	TOTAL
Total	0	0	0	0	0	0	0	0	0	0	0	0	0	0	0	0	0
Pk Hr																	
Pk Vol																	
PHF																	

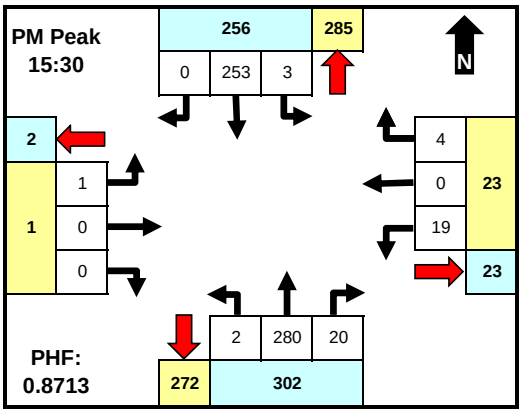

Time	LT	Thru	RT	Ped	LT	Thru	RT	Ped	LT	Thru	RT	Ped	LT	Thru	RT	Ped	TOTAL
15:30	1	67	0	0	4	0	1	0	0	67	4	0	0	0	0	0	144
15:45	1	49	0	0	3	0	0	0	1	74	6	0	0	0	0	0	134
16:00	0	77	0	0	10	0	1	0	1	73	4	0	1	0	0	0	167
16:15	1	60	0	0	2	0	2	0	0	66	6	0	0	0	0	0	137
16:30	0	50	0	0	5	0	0	0	0	80	6	0	0	0	0	0	141
16:45	1	45	0	0	1	0	3	0	0	71	5	0	0	0	0	0	126
17:00	1	43	0	0	4	0	0	0	0	75	5	0	0	0	0	0	128
17:15	1	38	0	0	5	0	1	0	0	88	7	0	0	0	0	0	140
17:30	0	21	0	0	1	0	0	0	0	68	7	0	0	0	0	0	97
17:45	1	29	0	0	2	0	0	0	0	65	4	0	0	0	0	0	101
18:00	0	41	0	0	1	0	1	0	0	54	6	0	0	0	0	0	103
18:15	0	25	0	0	4	0	0	0	0	51	5	0	0	0	0	0	85
Total	7	545	0	0	42	0	9	0	2	832	65	0	1	0	0	0	1503
Pk Hr																	3:30 PM
Pk Vol	3	253	0	0	19	0	4	0	2	280	20	0	1	0	0	0	582
PHF	0.750	0.821	0.000	0.000	0.475	0.000	0.500	0.000	0.500	0.946	0.833	0.000	0.250	0.000	0.000	0.000	0.871

Intersection Statistics

Per	Peak Hour	Pk Hr Vol	Peak Intvl	Pk Intv Vol	PHF
AM	7:15 AM	626	7:30 AM	190	0.824
MID					
PM	3:30 PM	582	4:00 PM	167	0.871

Peak Hour Statistics by Approach

Per	Peak Hour	Vol	PHF	Peak Hour	Vol	PHF	Peak Hour	Vol	PHF	Peak Hour	Vol	PHF
AM	7:15 AM	409	0.746	8:00 AM	50	0.781	7:45 AM	204	0.864	6:15 AM	2	0.500
MID												
PM	3:30 PM	256	0.831	4:00 PM	24	0.545	4:30 PM	337	0.887	3:30 PM	1	0.250

Comments

Approach & Departure Volumes (No Peds)

Per	Approach	Depart	Approach	Depart	Approach	Depart	Approach	Depart
AM	844	441	98	36	456	918	5	8
MID	0	0	0	0	0	0	0	0
PM	552	842	51	72	899	587	1	2

TRAFFIC RESEARCH & ANALYSIS, INC.
Specializing in Traffic Data Collection

Traffic Research & Analysis, Inc.
3844 East Indian School Road
Phoenix, AZ 85018
(602) 840-1500

Intersection TMC: 1602985
Count Date: 5/19/2016

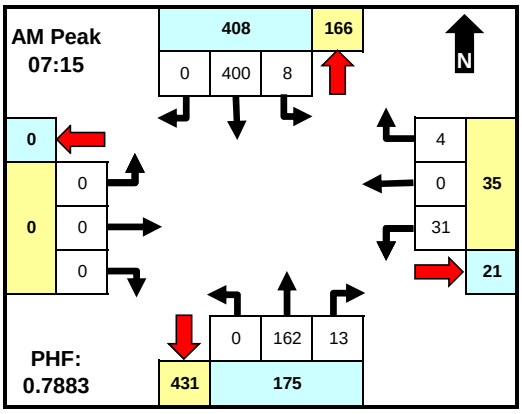

	From North				From East				From South				From West				INTSEC
	N WILLIAMSON VALLEY				W BARD RANCH RD				N WILLIAMSON VALLEY				W BARD RANCH RD				
Time	LT	Thru	RT	Ped	LT	Thru	RT	Ped	LT	Thru	RT	Ped	LT	Thru	RT	Ped	TOTAL
6:00	0	29	0	0	3	0	0	0	0	11	0	0	0	0	0	0	43
6:15	0	42	0	0	4	0	0	0	0	15	0	0	0	0	0	0	61
6:30	0	39	0	0	6	0	1	0	0	33	0	0	0	0	0	0	79
6:45	3	46	0	0	2	0	1	0	0	30	1	0	0	0	0	0	83
7:00	1	56	0	0	7	0	4	0	0	30	3	0	0	0	0	0	101
7:15	1	108	0	0	5	0	0	0	0	34	2	0	0	0	0	0	150
7:30	5	139	0	0	9	0	2	0	0	39	2	0	0	0	0	0	196
7:45	1	89	0	0	5	0	2	0	0	45	4	0	0	0	0	0	146
8:00	1	64	0	0	12	0	0	0	0	44	5	0	0	0	0	0	126
8:15	1	51	0	0	2	0	2	0	0	37	5	0	0	0	0	0	98
8:30	1	67	0	0	3	0	4	0	0	25	4	0	0	0	0	0	104
8:45	4	58	0	0	6	0	2	0	0	36	9	0	0	0	0	0	115
Total	18	788	0	0	64	0	18	0	0	379	35	0	0	0	0	0	1302
Pk Hr																	7:15 AM
Pk Vol	8	400	0	0	31	0	4	0	0	162	13	0	0	0	0	0	618
PHF	0.400	0.719	0.000	0.000	0.646	0.000	0.500	0.000	0.000	0.900	0.650	0.000	0.000	0.000	0.000	0.000	0.788

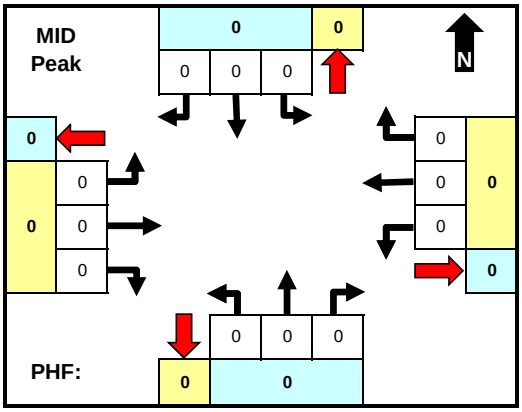

Time	LT	Thru	RT	Ped	LT	Thru	RT	Ped	LT	Thru	RT	Ped	LT	Thru	RT	Ped	TOTAL
Total	0	0	0	0	0	0	0	0	0	0	0	0	0	0	0	0	0
Pk Hr																	
Pk Vol																	
PHF																	

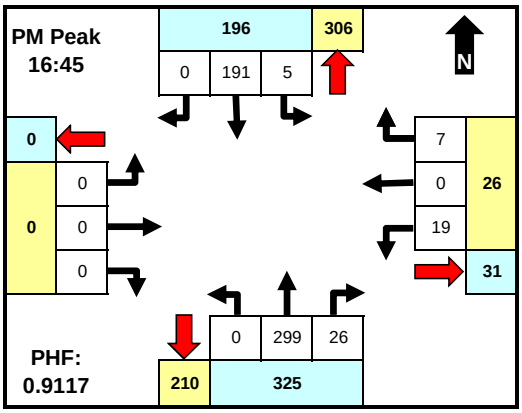

Time	LT	Thru	RT	Ped	LT	Thru	RT	Ped	LT	Thru	RT	Ped	LT	Thru	RT	Ped	TOTAL
15:30	1	58	0	0	4	0	2	0	0	66	9	0	0	0	0	0	140
15:45	3	44	0	0	4	0	4	0	0	60	13	0	0	0	0	0	128
16:00	1	42	0	0	3	0	3	0	0	70	4	0	0	0	0	0	123
16:15	5	52	0	0	4	0	2	0	0	62	6	0	0	0	0	0	131
16:30	2	48	0	0	6	0	0	0	0	78	5	0	0	0	0	0	139
16:45	1	41	0	0	4	0	1	0	0	66	5	0	0	0	0	0	118
17:00	2	51	0	0	7	0	1	0	0	73	4	0	0	0	0	0	138
17:15	0	54	0	0	3	0	3	0	0	81	9	0	0	0	0	0	150
17:30	2	45	0	0	5	0	2	0	0	79	8	0	0	0	0	0	141
17:45	0	31	0	0	5	0	3	0	0	44	4	0	0	0	0	0	87
18:00	2	35	0	0	1	0	1	0	0	42	3	0	0	0	0	0	84
18:15	0	36	0	0	0	0	3	0	0	35	4	0	0	0	0	0	78
Total	19	537	0	0	46	0	25	0	0	756	74	0	0	0	0	0	1457
Pk Hr																	4:45 PM
Pk Vol	5	191	0	0	19	0	7	0	0	299	26	0	0	0	0	0	547
PHF	0.625	0.884	0.000	0.000	0.679	0.000	0.583	0.000	0.000	0.923	0.722	0.000	0.000	0.000	0.000	0.000	0.912

Intersection Statistics

Per	Peak Hour	Pk Hr Vol	Peak Intvl	Pk Intv Vol	PHF
AM	7:15 AM	618	7:30 AM	196	0.788
MID					
PM	4:45 PM	547	5:15 PM	150	0.912

Peak Hour Statistics by Approach

Per	Peak Hour	Vol	PHF	Peak Hour	Vol	PHF	Peak Hour	Vol	PHF	Peak Hour	Vol	PHF
AM	7:15 AM	408	0.708	7:15 AM	35	0.729	7:30 AM	181	0.923			
MID												
PM	3:30 PM	206	0.873	5:00 PM	29	0.906	4:45 PM	325	0.903			

Comments

Approach & Departure Volumes (No Peds)

Per	Approach	Depart	Approach	Depart	Approach	Depart	Approach	Depart
AM	806	397	82	53	414	852	0	0
MID	0	0	0	0	0	0	0	0
PM	556	781	71	93	830	583	0	0

TRAFFIC RESEARCH & ANALYSIS, INC.
Specializing in Traffic Data Collection

Traffic Research & Analysis, Inc.
3844 East Indian School Road
Phoenix, AZ 85018
(602) 840-1500

Intersection TMC: 1602986
Count Date: 5/19/2016

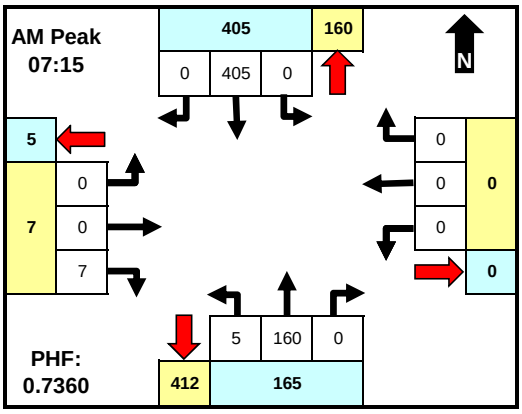

	From North				From East				From South				From West				INTSEC
	N WILLIAMSON VALLEY				BUCHANAN DR				N WILLIAMSON VALLEY				BUCHANAN DR				
Time	LT	Thru	RT	Ped	LT	Thru	RT	Ped	LT	Thru	RT	Ped	LT	Thru	RT	Ped	TOTAL
6:00	0	29	0	0	0	0	0	0	0	11	0	0	1	0	0	0	41
6:15	0	39	0	0	0	0	0	0	0	16	0	0	0	0	3	0	58
6:30	0	44	0	0	0	0	0	0	0	32	0	0	1	0	0	0	77
6:45	0	50	0	0	0	0	0	0	0	35	0	0	0	0	0	0	85
7:00	0	54	1	0	0	0	0	0	0	30	0	0	0	0	1	0	86
7:15	0	104	0	0	0	0	0	0	0	31	0	0	0	0	3	0	138
7:30	0	148	0	0	0	0	0	0	1	45	0	0	0	0	2	0	196
7:45	0	91	0	0	0	0	0	0	2	43	0	0	0	0	1	0	137
8:00	0	62	0	0	0	0	0	0	2	41	0	0	0	0	1	0	106
8:15	0	54	0	0	0	0	0	0	1	39	0	0	0	0	0	0	94
8:30	0	68	0	0	0	0	0	0	1	30	0	0	0	0	2	0	101
8:45	0	58	0	0	0	0	0	0	0	34	0	0	0	0	3	0	95
Total	0	801	1	0	0	0	0	0	7	387	0	0	2	0	16	0	1214
Pk Hr																	7:15 AM
Pk Vol	0	405	0	0	0	0	0	0	5	160	0	0	0	0	7	0	577
PHF	0.000	0.684	0.000	0.000	0.000	0.000	0.000	0.000	0.625	0.889	0.000	0.000	0.000	0.000	0.583	0.000	0.736

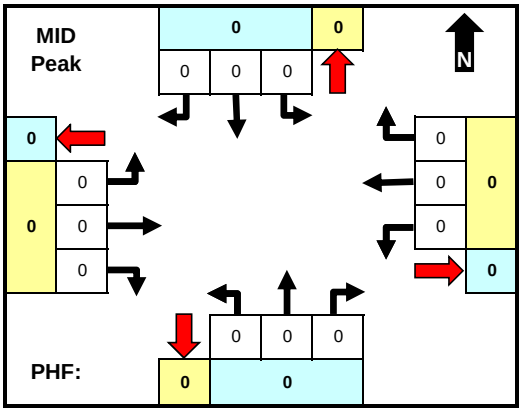

Time	LT	Thru	RT	Ped	LT	Thru	RT	Ped	LT	Thru	RT	Ped	LT	Thru	RT	Ped	TOTAL
Total	0	0	0	0	0	0	0	0	0	0	0	0	0	0	0	0	0
Pk Hr																	
Pk Vol																	
PHF																	

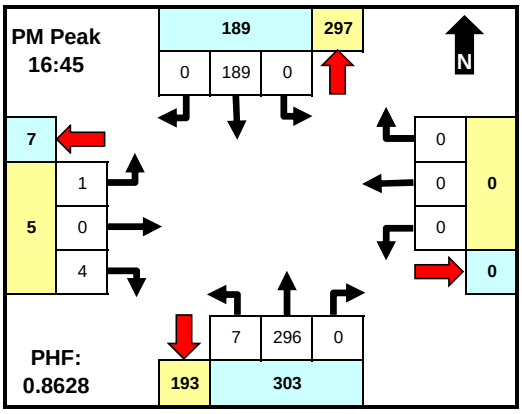

Time	LT	Thru	RT	Ped	LT	Thru	RT	Ped	LT	Thru	RT	Ped	LT	Thru	RT	Ped	TOTAL
15:30	0	58	0	0	0	0	0	0	3	71	0	0	0	0	1	0	133
15:45	0	47	1	0	0	0	0	0	1	65	0	0	0	0	0	0	114
16:00	0	44	1	0	0	0	0	0	1	75	0	0	0	0	0	0	121
16:15	0	56	0	0	0	0	0	0	1	63	0	0	1	0	0	0	121
16:30	0	49	0	0	0	0	0	0	3	67	0	0	0	0	1	0	120
16:45	0	40	0	0	0	0	0	0	1	61	0	0	0	0	1	0	103
17:00	0	60	0	0	0	0	0	0	2	80	0	0	1	0	1	0	144
17:15	0	44	0	0	0	0	0	0	2	78	0	0	0	0	2	0	126
17:30	0	45	0	0	0	0	0	0	2	77	0	0	0	0	0	0	124
17:45	0	31	1	0	0	0	0	0	3	43	0	0	0	0	0	0	78
18:00	0	37	0	0	0	0	0	0	0	45	0	0	0	0	0	0	82
18:15	0	35	0	0	0	0	0	0	0	36	0	0	0	0	0	0	71
Total	0	546	3	0	0	0	0	0	19	761	0	0	2	0	6	0	1337
Pk Hr																	4:45 PM
Pk Vol	0	189	0	0	0	0	0	0	7	296	0	0	1	0	4	0	497
PHF	0.000	0.788	0.000	0.000	0.000	0.000	0.000	0.000	0.875	0.925	0.000	0.000	0.250	0.000	0.500	0.000	0.863

Intersection Statistics

Per	Peak Hour	Pk Hr Vol	Peak Intvl	Pk Intv Vol	PHF
AM	7:15 AM	577	7:30 AM	196	0.736
MID					
PM	4:45 PM	497	5:00 PM	144	0.863

Peak Hour Statistics by Approach

Per	Peak Hour	Vol	PHF	Peak Hour	Vol	PHF	Peak Hour	Vol	PHF	Peak Hour	Vol	PHF
AM	7:15 AM	405	0.684				7:30 AM	174	0.946	7:00 AM	7	0.583
MID												
PM	3:30 PM	207	0.892				4:45 PM	303	0.924	4:30 PM	6	0.750

Comments

Approach & Departure Volumes (No Peds)

Per	Approach	Depart	Approach	Depart	Approach	Depart	Approach	Depart
AM	802	389	0	0	394	817	18	8
MID	0	0	0	0	0	0	0	0
PM	549	763	0	0	780	552	8	22

TRAFFIC RESEARCH & ANALYSIS, INC.
Specializing in Traffic Data Collection

Traffic Research & Analysis, Inc.
3844 East Indian School Road
Phoenix, AZ 85018
(602) 840-1500

Intersection TMC: 1602987
Count Date: 5/18/2016

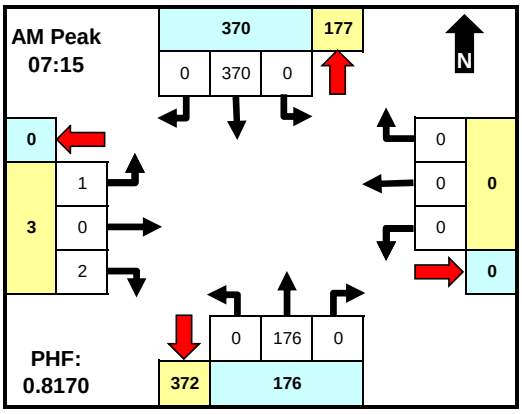

	From North				From East				From South				From West				INTSEC
	N WILLIAMSON VALLEY				N SCARLET DR				N WILLIAMSON VALLEY				N SCARLET DR				
Time	LT	Thru	RT	Ped	LT	Thru	RT	Ped	LT	Thru	RT	Ped	LT	Thru	RT	Ped	TOTAL
6:00	0	27	1	0	0	0	0	0	0	12	0	0	0	0	1	0	41
6:15	0	34	0	0	0	0	0	0	0	12	0	0	0	0	0	0	46
6:30	0	49	1	0	0	0	0	0	0	33	0	0	0	0	0	0	83
6:45	0	48	0	0	0	0	0	0	0	28	0	0	0	0	0	0	76
7:00	0	59	0	0	0	0	0	0	0	32	0	0	0	0	1	0	92
7:15	0	78	0	0	0	0	0	0	0	42	0	0	0	0	1	0	121
7:30	0	118	0	0	0	0	0	0	0	48	0	0	1	0	1	0	168
7:45	0	100	0	0	0	0	0	0	0	45	0	0	0	0	0	0	145
8:00	0	74	0	0	0	0	0	0	0	41	0	0	0	0	0	0	115
8:15	0	47	2	0	0	0	0	0	1	44	0	0	0	0	0	0	94
8:30	0	57	0	0	0	0	0	0	0	38	0	0	2	0	1	0	98
8:45	0	56	1	0	0	0	0	0	1	41	0	0	1	0	0	0	100
Total	0	747	5	0	0	0	0	0	2	416	0	0	4	0	5	0	1179
Pk Hr																	7:15 AM
Pk Vol	0	370	0	0	0	0	0	0	0	176	0	0	1	0	2	0	549
PHF	0.000	0.784	0.000	0.000	0.000	0.000	0.000	0.000	0.000	0.917	0.000	0.000	0.250	0.000	0.500	0.000	0.817

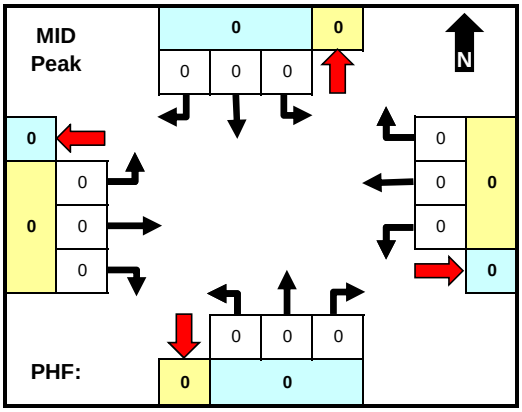

Time	LT	Thru	RT	Ped	LT	Thru	RT	Ped	LT	Thru	RT	Ped	LT	Thru	RT	Ped	TOTAL
Total	0	0	0	0	0	0	0	0	0	0	0	0	0	0	0	0	0
Pk Hr																	
Pk Vol																	
PHF																	

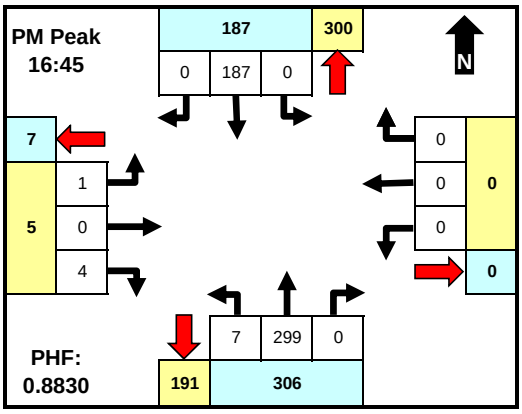

Time	LT	Thru	RT	Ped	LT	Thru	RT	Ped	LT	Thru	RT	Ped	LT	Thru	RT	Ped	TOTAL
15:30	0	60	0	0	0	0	0	0	3	70	0	0	0	0	1	0	134
15:45	0	44	1	0	0	0	0	0	1	57	0	0	0	0	0	0	103
16:00	0	42	1	0	0	0	0	0	1	75	0	0	0	0	0	0	119
16:15	0	56	0	0	0	0	0	0	1	66	0	0	1	0	0	0	124
16:30	0	49	0	0	0	0	0	0	3	67	0	0	0	0	1	0	120
16:45	0	40	0	0	0	0	0	0	1	64	0	0	0	0	1	0	106
17:00	0	52	0	0	0	0	0	0	2	71	0	0	1	0	1	0	127
17:15	0	50	0	0	0	0	0	0	2	87	0	0	0	0	2	0	141
17:30	0	45	0	0	0	0	0	0	2	77	0	0	0	0	0	0	124
17:45	0	31	1	0	0	0	0	0	3	43	0	0	0	0	0	0	78
18:00	0	37	0	0	0	0	0	0	0	47	0	0	0	0	0	0	84
18:15	0	37	0	0	0	0	0	0	0	36	0	0	0	0	0	0	73
Total	0	543	3	0	0	0	0	0	19	760	0	0	2	0	6	0	1333
Pk Hr																	4:45 PM
Pk Vol	0	187	0	0	0	0	0	0	7	299	0	0	1	0	4	0	498
PHF	0.000	0.899	0.000	0.000	0.000	0.000	0.000	0.000	0.875	0.859	0.000	0.000	0.250	0.000	0.500	0.000	0.883

Intersection Statistics

Per	Peak Hour	Pk Hr Vol	Peak Intvl	Pk Intv Vol	PHF
AM	7:15 AM	549	7:30 AM	168	0.817
MID					
PM	4:45 PM	498	5:15 PM	141	0.883

Peak Hour Statistics by Approach

Per	Peak Hour	Vol	PHF	Peak Hour	Vol	PHF	Peak Hour	Vol	PHF	Peak Hour	Vol	PHF
AM	7:15 AM	370	0.784				7:30 AM	179	0.932	6:45 AM	4	0.500
MID												
PM	3:30 PM	204	0.850				4:45 PM	306	0.860	4:30 PM	6	0.750

Comments

Approach & Departure Volumes (No Peds)

Per	Approach	Depart	Approach	Depart	Approach	Depart	Approach	Depart
AM	752	420	0	0	418	752	9	7
MID	0	0	0	0	0	0	0	0
PM	546	762	0	0	779	549	8	22

TRAFFIC RESEARCH & ANALYSIS, INC.
Specializing in Traffic Data Collection

Traffic Research & Analysis, Inc.
3844 East Indian School Road
Phoenix, AZ 85018
(602) 840-1500

Intersection TMC: 1602988
Count Date: 5/19/2016

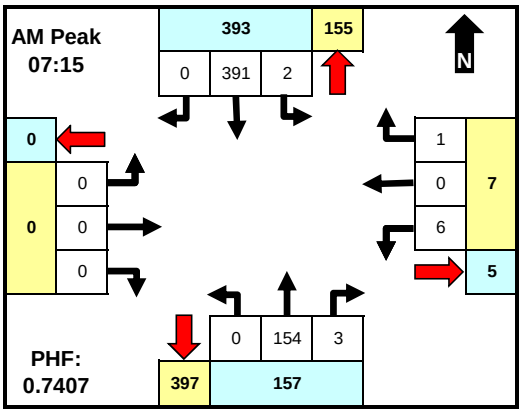

	From North				From East				From South				From West				INTSEC
	N WILLIAMSON VALLEY				CHIPMUNK RD				N WILLIAMSON VALLEY				CHIPMUNK RD				
Time	LT	Thru	RT	Ped	LT	Thru	RT	Ped	LT	Thru	RT	Ped	LT	Thru	RT	Ped	TOTAL
6:00	0	29	0	0	1	0	0	0	0	12	0	0	0	0	0	0	42
6:15	0	39	0	0	0	0	0	0	0	16	0	0	0	0	0	0	55
6:30	0	44	0	0	0	0	0	0	0	30	0	0	0	0	0	0	74
6:45	0	47	0	0	0	0	0	0	0	34	0	0	0	0	0	0	81
7:00	1	51	0	0	1	0	1	0	0	27	0	0	0	0	0	0	81
7:15	1	101	0	0	2	0	1	0	0	31	1	0	0	0	0	0	137
7:30	0	145	0	0	1	0	0	0	0	42	0	0	0	0	0	0	188
7:45	1	85	0	0	2	0	0	0	0	44	0	0	0	0	0	0	132
8:00	0	60	0	0	1	0	0	0	0	37	2	0	0	0	0	0	100
8:15	0	52	0	0	1	0	0	0	0	39	0	0	0	0	0	0	92
8:30	0	68	0	0	1	0	0	0	0	30	1	0	0	0	0	0	100
8:45	0	59	0	0	0	0	0	0	0	32	0	0	0	0	0	0	91
Total	3	780	0	0	10	0	2	0	0	374	4	0	0	0	0	0	1173
Pk Hr																	7:15 AM
Pk Vol	2	391	0	0	6	0	1	0	0	154	3	0	0	0	0	0	557
PHF	0.500	0.674	0.000	0.000	0.750	0.000	0.250	0.000	0.000	0.875	0.375	0.000	0.000	0.000	0.000	0.000	0.741

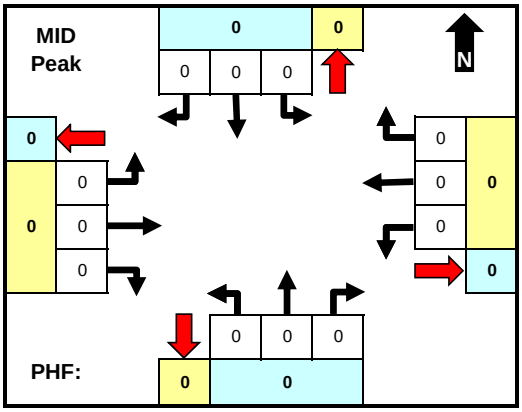

Time	LT	Thru	RT	Ped	LT	Thru	RT	Ped	LT	Thru	RT	Ped	LT	Thru	RT	Ped	TOTAL
Total	0	0	0	0	0	0	0	0	0	0	0	0	0	0	0	0	0
Pk Hr																	
Pk Vol																	
PHF																	

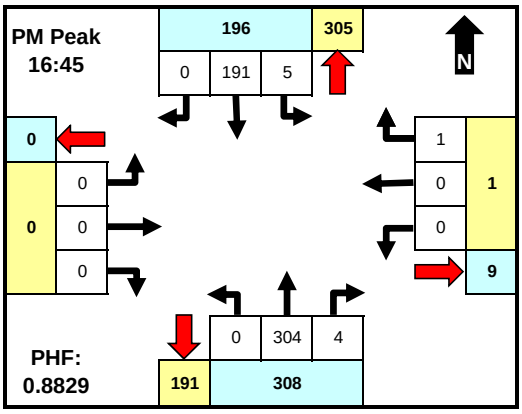

Time	LT	Thru	RT	Ped	LT	Thru	RT	Ped	LT	Thru	RT	Ped	LT	Thru	RT	Ped	TOTAL
15:30	2	57	0	0	1	0	0	0	0	65	0	0	0	0	0	0	125
15:45	1	47	0	0	1	0	0	0	0	58	0	0	0	0	0	0	107
16:00	0	44	0	0	1	0	0	0	0	76	0	0	0	0	0	0	121
16:15	0	55	0	0	0	0	0	0	0	67	1	0	0	0	0	0	123
16:30	0	47	0	0	3	0	1	0	0	60	0	0	0	0	0	0	111
16:45	0	43	0	0	0	0	0	0	0	73	1	0	0	0	0	0	117
17:00	1	52	0	0	0	0	1	0	0	65	0	0	0	0	0	0	119
17:15	2	51	0	0	0	0	0	0	0	89	1	0	0	0	0	0	143
17:30	2	45	0	0	0	0	0	0	0	77	2	0	0	0	0	0	126
17:45	0	33	0	0	0	0	1	0	0	47	0	0	0	0	0	0	81
18:00	0	38	0	0	0	0	0	0	0	46	0	0	0	0	0	0	84
18:15	1	35	0	0	1	0	0	0	0	31	2	0	0	0	0	0	70
Total	9	547	0	0	7	0	3	0	0	754	7	0	0	0	0	0	1327
Pk Hr																	4:45 PM
Pk Vol	5	191	0	0	0	0	1	0	0	304	4	0	0	0	0	0	505
PHF	0.625	0.918	0.000	0.000	0.000	0.000	0.250	0.000	0.000	0.854	0.500	0.000	0.000	0.000	0.000	0.000	0.883

Intersection Statistics

Per	Peak Hour	Pk Hr Vol	Peak Intvl	Pk Intv Vol	PHF
AM	7:15 AM	557	7:30 AM	188	0.741
MID					
PM	4:45 PM	505	5:15 PM	143	0.883

Peak Hour Statistics by Approach

Per	Peak Hour	Vol	PHF	Peak Hour	Vol	PHF	Peak Hour	Vol	PHF	Peak Hour	Vol	PHF
AM	7:15 AM	393	0.678	7:00 AM	8	0.667	7:30 AM	164	0.932			
MID												
PM	3:30 PM	206	0.873	3:45 PM	6	0.375	4:45 PM	308	0.856			

Comments

Approach & Departure Volumes (No Peds)

Per	Approach	Depart	Approach	Depart	Approach	Depart	Approach	Depart
AM	783	376	12	7	378	790	0	0
MID	0	0	0	0	0	0	0	0
PM	556	757	10	16	761	554	0	0

TRAFFIC RESEARCH & ANALYSIS, INC.
Specializing in Traffic Data Collection

Traffic Research & Analysis, Inc.
3844 East Indian School Road
Phoenix, AZ 85018
(602) 840-1500

Intersection TMC: 1602989
Count Date: 5/19/2016

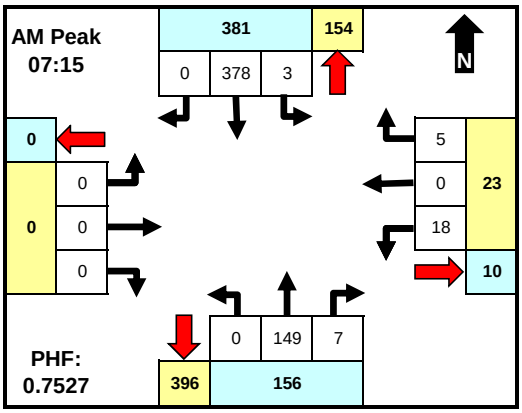

	From North				From East				From South				From West				INTSEC
	N WILLIAMSON VALLEY				W BLACK JACK RIDGE R				N WILLIAMSON VALLEY				W BLACK JACK RIDGE R				
Time	LT	Thru	RT	Ped	LT	Thru	RT	Ped	LT	Thru	RT	Ped	LT	Thru	RT	Ped	TOTAL
6:00	0	26	0	0	2	0	1	0	0	13	0	0	0	0	0	0	42
6:15	0	42	0	0	1	0	0	0	0	15	0	0	0	0	0	0	58
6:30	0	39	0	0	4	0	0	0	0	30	0	0	0	0	0	0	73
6:45	0	50	0	0	1	0	1	0	0	39	0	0	0	0	0	0	91
7:00	1	54	0	0	2	0	0	0	0	31	1	0	0	0	0	0	89
7:15	0	99	0	0	9	0	0	0	0	30	0	0	0	0	0	0	138
7:30	2	140	0	0	2	0	1	0	0	37	4	0	0	0	0	0	186
7:45	1	84	0	0	2	0	1	0	0	44	3	0	0	0	0	0	135
8:00	0	55	0	0	5	0	3	0	0	38	0	0	0	0	0	0	101
8:15	2	51	0	0	3	0	2	0	0	39	1	0	0	0	0	0	98
8:30	1	66	0	0	3	0	0	0	0	29	0	0	0	0	0	0	99
8:45	1	56	0	0	3	0	1	0	0	32	3	0	0	0	0	0	96
Total	8	762	0	0	37	0	10	0	0	377	12	0	0	0	0	0	1206
Pk Hr																	7:15 AM
Pk Vol	3	378	0	0	18	0	5	0	0	149	7	0	0	0	0	0	560
PHF	0.375	0.675	0.000	0.000	0.500	0.000	0.417	0.000	0.000	0.847	0.438	0.000	0.000	0.000	0.000	0.000	0.753

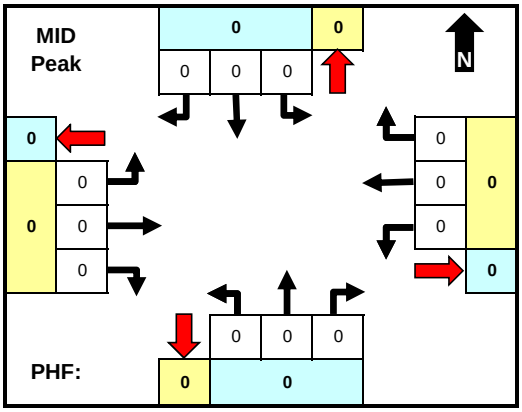

Time	LT	Thru	RT	Ped	LT	Thru	RT	Ped	LT	Thru	RT	Ped	LT	Thru	RT	Ped	TOTAL
Total	0	0	0	0	0	0	0	0	0	0	0	0	0	0	0	0	0
Pk Hr																	
Pk Vol																	
PHF																	

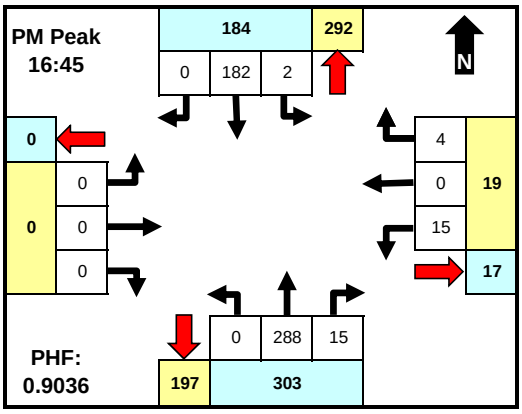

Time	LT	Thru	RT	Ped	LT	Thru	RT	Ped	LT	Thru	RT	Ped	LT	Thru	RT	Ped	TOTAL
15:30	0	53	0	0	7	0	2	0	0	65	4	0	0	0	0	0	131
15:45	1	46	0	0	2	0	1	0	0	62	5	0	0	0	0	0	117
16:00	1	43	0	0	0	0	2	0	0	62	4	0	0	0	0	0	112
16:15	1	50	0	0	4	0	3	0	0	63	5	0	0	0	0	0	126
16:30	0	40	0	0	5	0	1	0	0	62	1	0	0	0	0	0	109
16:45	1	38	0	0	2	0	0	0	0	68	2	0	0	0	0	0	111
17:00	0	55	0	0	6	0	0	0	0	65	5	0	0	0	0	0	131
17:15	0	46	0	0	4	0	1	0	0	83	6	0	0	0	0	0	140
17:30	1	43	0	0	3	0	3	0	0	72	2	0	0	0	0	0	124
17:45	1	32	0	0	0	0	1	0	0	45	2	0	0	0	0	0	81
18:00	2	31	0	0	2	0	2	0	0	41	5	0	0	0	0	0	83
18:15	1	34	0	0	3	0	0	0	0	31	4	0	0	0	0	0	73
Total	9	511	0	0	38	0	16	0	0	719	45	0	0	0	0	0	1338
Pk Hr																	4:45 PM
Pk Vol	2	182	0	0	15	0	4	0	0	288	15	0	0	0	0	0	506
PHF	0.500	0.827	0.000	0.000	0.625	0.000	0.333	0.000	0.000	0.867	0.625	0.000	0.000	0.000	0.000	0.000	0.904

Intersection Statistics

Per	Peak Hour	Pk Hr Vol	Peak Intvl	Pk Intv Vol	PHF
AM	7:15 AM	560	7:30 AM	186	0.753
MID					
PM	4:45 PM	506	5:15 PM	140	0.904

Peak Hour Statistics by Approach

Per	Peak Hour	Vol	PHF	Peak Hour	Vol	PHF	Peak Hour	Vol	PHF	Peak Hour	Vol	PHF
AM	7:00 AM	381	0.671	7:15 AM	23	0.639	7:30 AM	166	0.883			
MID												
PM	3:30 PM	195	0.920	3:30 PM	21	0.583	4:45 PM	303	0.851			

Comments

Approach & Departure Volumes (No Peds)

Per	Approach	Depart	Approach	Depart	Approach	Depart	Approach	Depart
AM	770	387	47	20	389	799	0	0
MID	0	0	0	0	0	0	0	0
PM	520	735	54	54	764	549	0	0

TRAFFIC RESEARCH & ANALYSIS, INC.
Specializing in Traffic Data Collection

Traffic Research & Analysis, Inc.
3844 East Indian School Road
Phoenix, AZ 85018
(602) 840-1500

Intersection TMC: 1602964
Count Date: 4/7/2016

N WILLIAMSON VALLEY RD & N AMERICAN RANCH RD

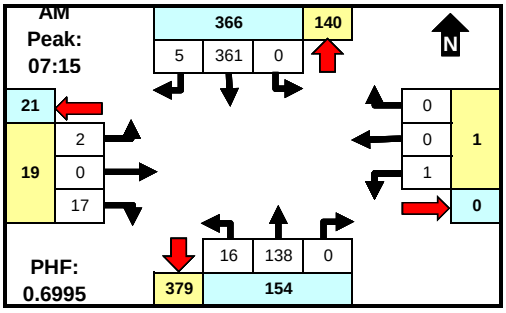

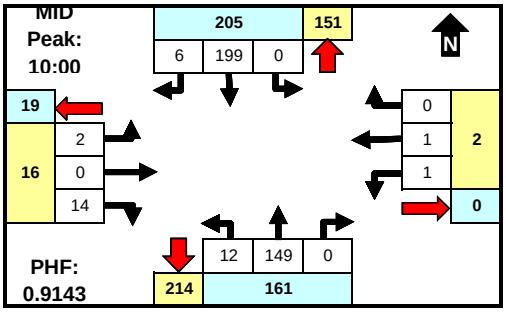

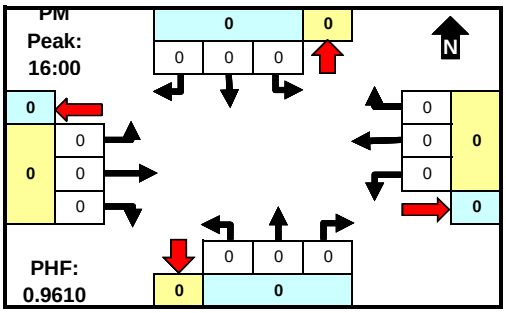

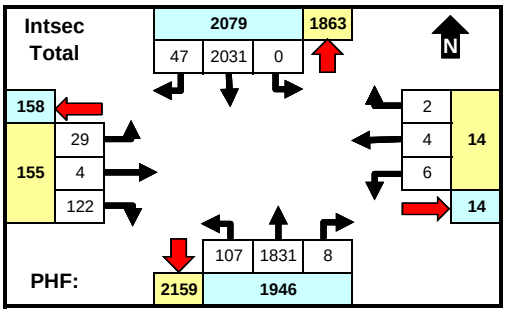

Comments

MID period defined as 10:00 AM - 2:00 PM. Peaks defined based on total intersection volume for all vehicle types.

	From North				From East				From South				From West				INTSEC
	N WILLIAMSON VALLEY				N AMERICAN RANCH RD				N WILLIAMSON VALLEY				N AMERICAN RANCH RD				
Time	LT	Thru	RT	U	LT	Thru	RT	U	LT	Thru	RT	U	LT	Thru	RT	U	TOTAL
06:00	0	25	1	0	0	0	0	0	0	11	0	0	0	0	1	0	38
06:15	0	38	1	0	0	0	0	0	0	18	0	0	0	0	0	0	57
06:30	0	39	0	0	1	0	0	0	0	27	0	0	0	0	1	0	68
06:45	0	44	1	0	0	0	0	0	1	36	0	0	0	0	2	0	84
07:00	0	54	3	0	0	0	0	0	3	29	0	0	0	0	1	0	90
07:15	0	84	0	0	0	0	0	0	1	29	0	0	0	0	4	0	118
07:30	0	140	2	0	0	0	0	0	5	38	0	0	2	0	6	0	193
07:45	0	83	2	0	0	0	0	0	4	33	0	0	0	0	5	0	127
08:00	0	54	1	0	1	0	0	0	6	38	0	0	0	0	2	0	102
08:15	0	51	0	0	0	0	0	0	3	35	0	0	0	0	3	0	92
08:30	0	58	0	0	0	0	0	0	3	30	0	0	0	0	5	0	96
08:45	0	52	1	0	1	0	0	0	3	32	0	0	0	0	6	0	95
09:00	0	59	1	0	0	0	0	0	3	31	0	0	0	0	2	0	96
09:15	0	53	0	0	0	0	0	0	2	37	0	0	0	1	4	0	97
09:30	0	55	1	0	1	0	1	2	3	26	1	0	0	1	1	0	92
09:45	0	48	3	0	0	0	0	0	2	52	0	0	1	0	3	0	109
10:00	0	52	1	0	0	0	0	0	1	48	0	0	0	0	3	0	105
10:15	0	50	0	0	0	0	0	0	3	43	0	0	1	0	4	0	101
10:30	0	48	2	0	0	1	0	0	6	27	0	0	1	0	2	0	87
10:45	0	49	3	0	1	0	0	0	2	31	0	0	0	0	5	0	91
11:00	0	36	0	0	0	1	0	0	2	44	0	0	2	1	0	0	86
11:15	0	39	0	0	0	0	0	0	2	50	0	0	1	0	3	0	95
11:30	0	41	0	0	0	0	0	0	3	45	0	0	0	0	8	0	97
11:45	0	44	1	0	0	0	1	0	1	44	0	0	2	0	4	0	97
12:00	0	39	2	0	0	0	0	0	3	27	0	0	2	0	3	0	76
12:15	0	37	1	0	0	0	0	0	2	46	0	0	2	0	3	0	91
12:30	0	39	4	0	0	0	0	0	4	43	0	0	2	0	3	0	95
12:45	0	39	0	0	0	1	0	0	5	41	1	0	1	0	1	0	89
13:00	0	31	3	0	0	0	0	0	3	38	0	0	1	0	3	0	79
13:15	0	26	1	0	0	0	0	0	5	49	1	0	1	1	5	0	89
13:30	0	36	0	0	0	0	0	0	3	44	0	0	1	0	1	0	85
13:45	0	35	2	0	0	0	0	0	3	44	1	0	1	0	3	0	89
14:00	0	39	0	0	0	0	0	0	0	62	0	0	0	0	2	0	103
14:15	0	39	0	0	1	1	0	0	2	65	1	0	0	0	0	0	109
14:30	0	38	0	0	0	0	0	0	0	46	0	0	2	0	3	0	89
14:45	0	36	1	1	0	0	0	0	1	45	0	0	0	0	2	0	86
15:00	0	50	1	0	0	0	0	0	2	42	0	0	0	0	1	0	96
15:15	0	37	4	0	0	0	0	0	1	69	0	0	1	0	1	0	113
15:30	0	47	0	0	0	0	0	0	4	44	2	0	1	0	1	0	99
15:45	0	17	1	0	0	0	0	0	3	50	0	0	1	0	2	0	74
16:00	0	37	1	0	0	0	0	0	1	64	0	0	1	0	5	0	109
16:15	0	43	0	0	0	0	0	0	1	54	1	0	1	0	4	0	104
16:30	0	35	0	0	0	0	0	0	1	60	0	0	0	0	3	0	99
16:45	0	35	2	0	0	0	0	0	4	64	0	0	1	0	1	0	107
11:00																	0
11:15																	0
11:30																	0
11:45																	0
12:00																	0
12:15																	0
12:30																	0
12:45																	0
13:00																	0
13:15																	0
13:30																	0
13:45																	0
14:00																	0
14:15																	0
14:30																	0
14:45																	0
15:00																	0
15:15																	0
15:30																	0
15:45																	0
16:00																	0
16:15																	0
16:30																	0
16:45																	0
17:00																	0
17:15																	0
17:30																	0
17:45																	0
18:00																	0
18:15																	0
18:30																	0
18:45																	0
19:00																	0
19:15																	0
19:30																	0
19:45																	0
20:00																	0
20:15																	0
20:30																	0
20:45																	0
21:00																	0
21:15																	0
21:30																	0
21:45																	0
22:00																	0
22:15																	0
22:30																	0
22:45																	0
23:00																	0
23:15																	0
23:30																	0
23:45																	0
Total	0	2031	47	1	6	4	2	2	107	1831	8	0	29	4	122	0	4194
AM Peak Hr:																	7:15
Pk Vol	0	361	5	0	1	0	0	0	16	138	0	0	2	0	17	0	540
PHF	n/a	1.551	1.600	n/a	4.000	n/a	n/a	n/a	1.500	1.101	n/a	n/a	4.000	n/a	1.412	n/a	0.699
MID Peak Hr:																	10:00
Pk Vol	0	199	6	0	1	1	0	0	12	149	0	0	2	0	14	0	384
PHF	n/a	1.045	2.000	n/a	4.000	4.000	n/a	n/a	2.000	1.289	n/a	n/a	2.000	n/a	1.429	n/a	0.914
PM Peak Hr:																	16:00
Pk Vol	0	0	0	0	0	0	0	0	0	0	0	0	0	0	0	0	419
PHF	n/a	n/a	n/a	n/a	n/a	n/a	n/a	n/a	n/a	n/a	n/a	n/a	n/a	n/a	n/a	n/a	0.961

TRAFFIC RESEARCH & ANALYSIS, INC.
Specializing in Traffic Data Collection

Traffic Research & Analysis, Inc.
3844 East Indian School Road
Phoenix, AZ 85018
(602) 840-1500

Intersection TMC: 1602961
Count Date: 4/7/2016

N WILLIAMSON VALLEY RD & OUTER LOOP RD

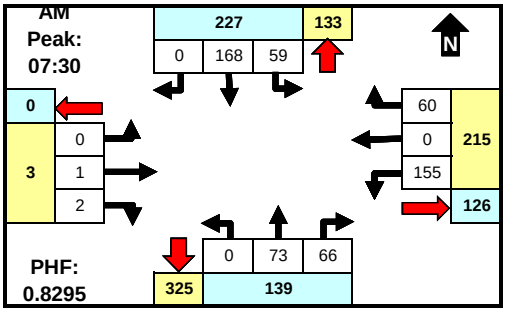

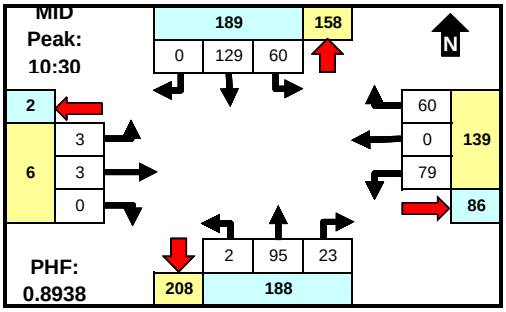

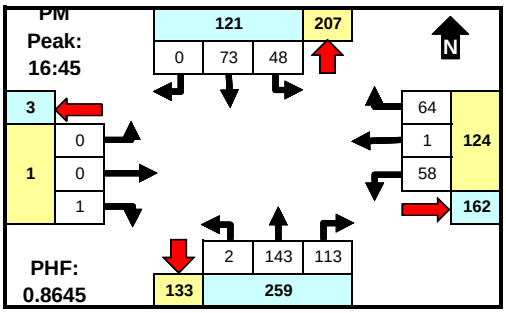

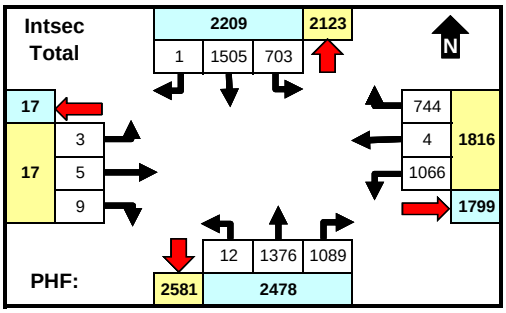

Comments

MID period defined as 10:00 AM - 2:00 PM. Peaks defined based on total intersection volume for all vehicle types.

	From North				From East				From South				From West				INTSEC
	N WILLIAMSON VALLEY				OUTER LOOP RD				N WILLIAMSON VALLEY				OUTER LOOP RD				
Time	LT	Thru	RT	U	LT	Thru	RT	U	LT	Thru	RT	U	LT	Thru	RT	U	TOTAL
00:00	1	1	0	0	1	0	1	0	0	1	0	0	0	0	0	0	5
00:15	1	0	0	0	0	0	1	0	0	1	0	0	0	0	0	0	3
00:30	0	0	0	0	0	0	0	0	0	0	0	0	0	0	0	0	0
00:45	0	0	0	0	0	0	0	0	0	2	2	0	0	0	0	0	4
01:00	0	0	0	0	0	0	0	0	0	0	0	0	0	0	0	0	0
01:15	0	0	0	0	0	0	0	0	1	2	1	0	0	0	0	0	4
01:30	0	0	0	0	0	0	0	0	0	3	1	0	0	0	0	0	4
01:45	0	0	0	0	1	0	0	0	0	0	0	0	0	0	0	0	1
02:00	1	0	0	0	0	0	0	0	0	1	0	0	0	0	0	0	2
02:15	1	0	0	0	0	0	0	0	0	1	0	0	0	0	0	0	2
02:30	0	1	0	0	0	0	1	0	0	0	0	0	0	0	0	0	2
02:45	0	0	0	0	0	0	0	0	0	2	1	0	0	0	0	0	3
03:00	0	0	0	0	0	0	2	0	0	1	0	0	0	0	0	0	3
03:15	1	0	0	0	0	0	1	0	0	1	0	0	0	0	0	0	3
03:30	0	0	0	0	0	0	1	0	0	1	0	0	0	0	0	0	2
03:45	1	0	0	0	1	0	0	0	0	0	0	0	0	0	0	0	2
04:00	2	2	0	0	0	0	1	0	0	0	0	0	0	0	0	0	5
04:15	2	5	0	0	1	0	0	0	0	0	1	0	0	0	0	0	9
04:30	2	0	0	0	2	0	3	0	0	0	1	0	0	0	0	0	8
04:45	0	6	0	0	1	0	2	0	0	4	0	0	0	0	0	0	13
05:00	6	0	0	0	1	0	2	0	0	5	4	0	0	0	0	0	18
05:15	4	2	0	0	3	0	5	0	0	2	5	0	0	0	0	0	21
05:30	5	7	0	0	8	0	2	0	0	1	1	0	0	0	0	0	24
05:45	3	10	0	0	6	0	3	0	0	4	4	0	0	1	0	0	31
06:00	1	19	0	0	11	0	4	0	0	3	3	0	0	0	0	0	41
06:15	8	26	0	0	18	0	5	0	0	3	9	0	0	0	0	0	69
06:30	7	27	0	0	24	0	9	0	0	14	13	0	0	0	1	0	95
06:45	9	24	0	0	19	0	19	0	0	13	13	0	0	0	0	0	97
07:00	12	42	0	0	26	0	16	0	0	3	3	0	0	0	0	0	102
07:15	10	33	0	0	42	0	20	0	0	3	9	0	0	0	0	0	117
07:30	20	62	0	0	54	0	13	0	0	14	13	0	0	0	0	0	176
07:45	13	34	0	0	53	0	18	0	0	14	12	0	0	1	1	0	146
08:00	10	38	0	0	26	0	20	0	0	23	19	0	0	0	1	0	137
08:15	16	34	0	0	22	0	9	0	0	22	22	0	0	0	0	0	125
08:30	12	33	0	0	30	0	12	0	0	21	14	0	0	0	0	0	122
08:45	13	30	0	0	24	0	15	0	1	25	15	0	0	0	0	0	123
09:00	9	27	0	0	10	0	8	0	0	10	16	0	0	0	0	0	80
09:15	5	37	0	0	23	1	8	0	0	12	21	0	0	0	0	0	107
09:30	13	41	0	0	21	0	10	0	0	16	13	0	0	0	1	0	115
09:45	20	30	0	0	20	0	18	0	0	17	14	0	0	0	1	0	120
10:00	16	22	0	0	21	0	11	0	0	20	15	0	0	0	0	0	105
10:15	10	25	0	0	20	0	11	0	2	20	16	0	0	0	1	0	105
10:30	14	37	0	0	22	0	20	0	0	21	29	0	2	1	0	0	146
10:45	10	36	0	0	27	0	13	0	0	25	22	0	0	0	0	0	133
11:00	23	23	0	0	15	0	12	0	2	21	16	0	1	1	0	0	114
11:15	13	33	0	0	15	0	15	0	0	28	24	0	0	1	0	0	129
11:30	16	34	0	0	17	0	18	0	0	23	22	0	0	0	0	0	130
11:45	27	32	0	0	16	0	17	0	0	21	22	0	0	0	0	0	135
12:00	13	29	0	0	15	0	18	0	0	25	27	0	0	0	0	0	127
12:15	12	28	0	0	20	0	11	1	0	26	17	0	0	0	0	0	115
12:30	12	40	0	0	17	0	16	0	0	31	22	0	0	0	0	0	138
12:45	9	30	0	0	13	0	8	0	0	30	13	0	0	0	0	0	103
13:00	12	36	0	0	13	0	8	0	0	32	21	0	0	0	0	0	122
13:15	16	25	0	0	17	0	15	0	0	23	21	0	0	0	0	0	117
13:30	11	30	0	0	18	0	20	0	0	36	14	0	0	0	0	0	129
13:45	15	17	0	0	15	0	14	0	0	23	17	0	0	0	0	0	101
14:00	13	21	0	0	16	0	12	0	0	21	13	0	0	0	0	0	96
14:15	15	30	0	0	18	0	14	0	0	36	29	0	0	0	0	0	142
14:30	21	28	0	0	22	0	10	0	0	29	20	0	0	0	0	0	130
14:45	15	31	0	0	15	1	7	0	0	22	18	0	0	0	1	0	110
15:00	18	30	0	0	13	0	10	0	1	24	24	0	0	0	0	0	120
15:15	16	26	0	0	15	0	12	0	0	27	26	0	0	0	0	0	122
15:30	17	25	0	0	8	0	9	0	0	23	18	0	0	0	0	0	100
15:45	13	16	0	0	18	0	11	0	0	32	23	0	0	0	0	0	113
16:00	17	31	0	0	13	0	8	0	0	29	23	0	0	0	0	0	121
16:15	10	12	0	0	13	0	23	0	1	43	24	1	0	0	0	0	127
16:30	19	12	0	0	21	0	16	0	0	33	27	0	0	0	0	0	128
16:45	13	24	0	0	14	1	10	1	1	30	35	0	0	0	1	0	130
17:00	6	25	0	0	10	0	15	0	0	37	27	0	0	0	0	0	120
17:15	15	21	0	0	16	1	20	0	0	26	56	0	0	0	0	0	155
17:30	10	23	0	0	22	0	16	0	1	31	28	0	0	0	0	0	131
17:45	8	27	0	0	7	0	10	0	0	23	23	0	0	0	0	0	98
18:00	6	18	0	0	15	0	12	0	0	31	18	0	0	0	0	0	100
18:15	5	10	0	0	8	0	7	0	0	17	25	0	0	0	1	0	73
18:30	6	5	0	0	6	0	9	0	1	18	14	0	0	0	0	0	59
18:45	3	5	0	0	7	0	6	0	0	11	10	0	0	0	0	0	42
19:00	6	3	0	0	3	0	2	0	0	17	4	0	0	0	0	0	35
19:15	0	2	0	0	7	0	13	0	0	25	15	0	0	0	0	0	62
19:30	1	1	0	0	0	0	4	0	0	24	2	0	0	0	0	0	32
19:45	3	1	0	0	8	0	8	0	0	15	5	0	0	0	0	0	40
20:00	4	1	0	0	9	0	2	0	0	19	6	0	0	0	0	0	41
20:15	1	2	1	0	6	0	4	0	0	9	4	0	0	0	0	0	27
20:30	2	6	0	0	9	0	2	0	0	15	2	0	0	0	0	0	36
20:45	1	3	0	0	4	0	1	0	1	6	2	0	0	0	0	0	18
21:00	1	2	0	0	3	0	1	0	0	6	3	0	0	0	0	0	16
21:15	0	2	0	0	3	0	9	0	0	7	3	0	0	0	0	0	24
21:30	0	3	0	0	1	0	0	0	0	9	7	0	0	0	0	0	20
21:45	0	3	0	0	1	0	2	0	0	5	1	0	0	0	0	0	12
22:00	0	0	0	0	0	0	0	0	0	4	2	0	0	0	0	0	6
22:15	0	3	0	0	1	0	1	0	0	4	3	0	0	0	0	0	12
22:30	0	1	0	0	1	0	0	0	0	4	0	0	0	0	0	0	6
22:45	1	0	0	0	0	0	1	0	0	2	0	0	0	0	0	0	4
23:00	0	1	0	0	2	0	0	0	0	3	0	0	0	0	0	0	6
23:15	0	1	0	0	1	0	0	0	0	3	0	0	0	0	0	0	5
23:30	0	0	0	0	1	0	0	0	0	4	1	0	0	0	0	0	6
23:45	0	2	0	0	0	0	1	0	0	2	0	0	0	0	0	0	5
Total	703	1505	1	0	1066	4	744	2	12	1376	1089	1	3	5	9	0	6520
AM Peak Hr:																	7:30
Pk Vol	59	168	0	0	155	0	60	0	0	73	66	0	0	1	2	0	584
PHF	1.356	1.476	n/a	n/a	1.394	n/a	1.333	n/a	n/a	1.260	1.333	n/a	n/a	4.000	2.000	n/a	0.830
MID Peak Hr:																	10:30
Pk Vol	60	129	0	0	79	0	60	0	2	95	91	0	3	3	0	0	522
PHF	1.533	1.147	n/a	n/a	1.367	n/a	1.333	n/a	4.000	1.179	1.275	n/a	2.667	1.333	n/a	n/a	0.894
PM Peak Hr:																	16:45
Pk Vol	48	73	0	0	58	1	64	1	2	143	113	1	0	0	1	0	536
PHF	0.632	0.730	n/a	n/a	0.690	0.250	0.696	0.250	0.500	0.831	0.807	0.250	n/a	n/a	0.250	n/a	0.865

TRAFFIC RESEARCH & ANALYSIS, INC.
Specializing in Traffic Data Collection

Traffic Research & Analysis, Inc.
3844 East Indian School Road
Phoenix, AZ 85018
(602) 840-1500

Intersection TMC: 1602990
Count Date: 5/18/2016

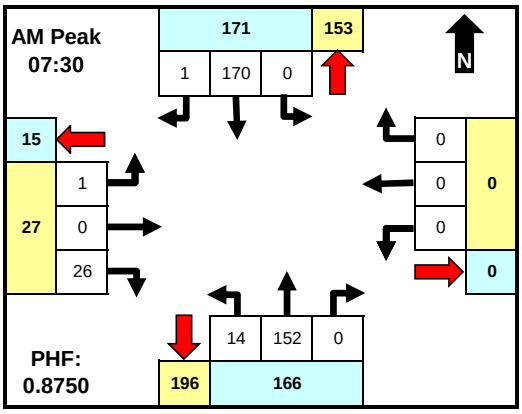

	From North				From East				From South				From West				INTSEC
	N WILLIAMSON VALLEY				N SHARPS RD				N WILLIAMSON VALLEY				N SHARPS RD				
Time	LT	Thru	RT	Ped	LT	Thru	RT	Ped	LT	Thru	RT	Ped	LT	Thru	RT	Ped	TOTAL
6:00	0	16	0	0	0	0	0	0	2	8	0	0	0	0	6	0	32
6:15	0	22	0	0	0	0	0	0	0	8	0	0	0	0	0	0	30
6:30	0	28	0	0	0	0	0	0	1	23	0	0	0	0	0	0	52
6:45	0	34	1	0	0	0	0	0	4	34	0	0	0	0	4	0	77
7:00	0	36	0	0	0	0	0	0	5	28	0	0	0	0	4	0	73
7:15	0	36	0	0	0	0	0	0	2	26	0	0	0	0	4	0	68
7:30	0	50	0	0	0	0	0	0	2	44	0	0	0	0	8	0	104
7:45	0	48	0	0	0	0	0	0	5	31	0	0	0	0	6	0	90
8:00	0	39	1	0	0	0	0	0	2	45	0	0	0	0	6	0	93
8:15	0	33	0	0	0	0	0	0	5	32	0	0	1	0	6	0	77
8:30	0	34	0	0	0	0	0	0	4	31	0	0	0	0	7	0	76
8:45	0	30	0	0	0	0	0	0	0	24	0	0	0	0	3	0	57
Total	0	406	2	0	0	0	0	0	32	334	0	0	1	0	54	0	829
Pk Hr																	7:30 AM
Pk Vol	0	170	1	0	0	0	0	0	14	152	0	0	1	0	26	0	364
PHF	0.000	0.850	0.250	0.000	0.000	0.000	0.000	0.000	0.700	0.844	0.000	0.000	0.250	0.000	0.813	0.000	0.875

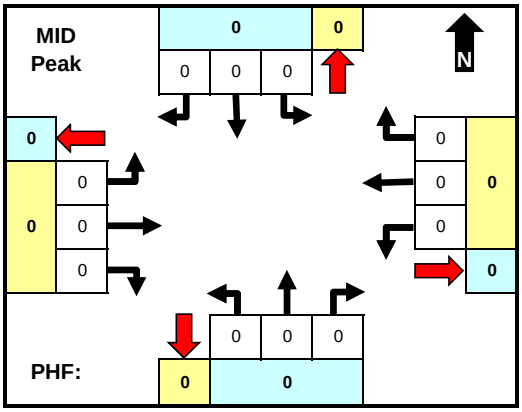

Time	LT	Thru	RT	Ped	LT	Thru	RT	Ped	LT	Thru	RT	Ped	LT	Thru	RT	Ped	TOTAL
Total	0	0	0	0	0	0	0	0	0	0	0	0	0	0	0	0	0
Pk Hr																	
Pk Vol																	
PHF																	

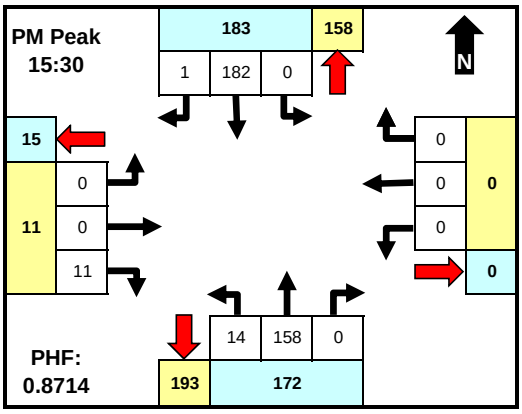

Time	LT	Thru	RT	Ped	LT	Thru	RT	Ped	LT	Thru	RT	Ped	LT	Thru	RT	Ped	TOTAL
15:30	0	50	1	0	0	0	0	0	5	39	0	0	0	0	3	0	98
15:45	0	48	0	0	0	0	0	0	5	36	0	0	0	0	3	0	92
16:00	0	53	0	0	0	0	0	0	0	50	0	0	0	0	2	0	105
16:15	0	31	0	0	0	0	0	0	4	33	0	0	0	0	3	0	71
16:30	0	26	0	0	0	0	0	0	5	39	0	0	0	0	2	0	72
16:45	0	29	0	0	0	0	0	0	2	51	0	0	0	0	3	0	85
17:00	0	28	0	0	0	0	0	0	3	39	0	0	0	0	2	0	72
17:15	0	24	0	0	0	0	0	0	7	41	0	0	0	0	5	0	77
17:30	0	19	0	0	0	0	0	0	3	35	0	0	0	0	0	0	57
17:45	0	25	0	0	0	0	0	0	5	35	0	0	0	0	3	0	68
18:00	0	24	0	0	0	0	0	0	0	29	0	0	0	0	1	0	54
18:15	0	16	0	0	0	0	0	0	4	33	0	0	0	0	1	0	54
Total	0	373	1	0	0	0	0	0	43	460	0	0	0	0	28	0	905
Pk Hr																	3:30 PM
Pk Vol	0	182	1	0	0	0	0	0	14	158	0	0	0	0	11	0	366
PHF	0.000	0.858	0.250	0.000	0.000	0.000	0.000	0.000	0.700	0.790	0.000	0.000	0.000	0.000	0.917	0.000	0.871

Intersection Statistics

Per	Peak Hour	Pk Hr Vol	Peak Intvl	Pk Intv Vol	PHF
AM	7:30 AM	364	7:30 AM	104	0.875
MID					
PM	3:30 PM	366	4:00 PM	105	0.871

Peak Hour Statistics by Approach

Per	Peak Hour	Vol	PHF	Peak Hour	Vol	PHF	Peak Hour	Vol	PHF	Peak Hour	Vol	PHF
AM	7:15 AM	174	0.870				7:30 AM	166	0.883	7:30 AM	27	0.844
MID												
PM	3:30 PM	183	0.863				4:30 PM	187	0.882	4:30 PM	12	0.600

Comments

Approach & Departure Volumes (No Peds)

Per	Approach	Depart	Approach	Depart	Approach	Depart	Approach	Depart
AM	408	335	0	0	366	460	55	34
MID	0	0	0	0	0	0	0	0
PM	374	460	0	0	503	401	28	44

TRAFFIC RESEARCH & ANALYSIS, INC.
Specializing in Traffic Data Collection

Traffic Research & Analysis, Inc.
3844 East Indian School Road
Phoenix, AZ 85018
(602) 840-1500

Intersection TMC: 1602965
Count Date: 4/7/2016

N WILLIAMSON VALLEY RD & W STAZENSKI RD

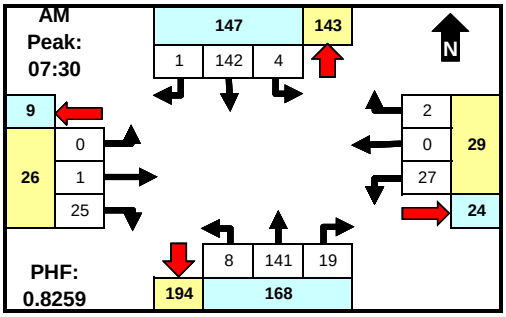

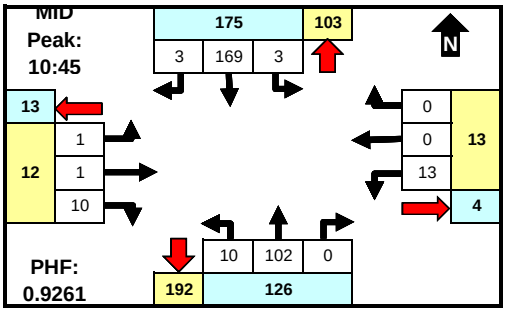

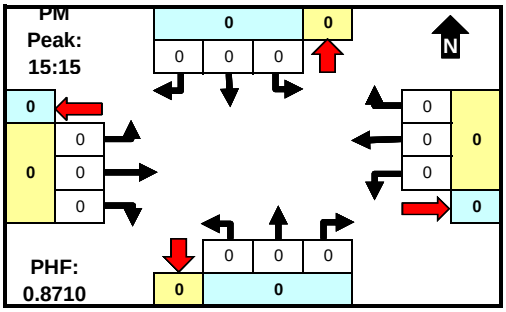

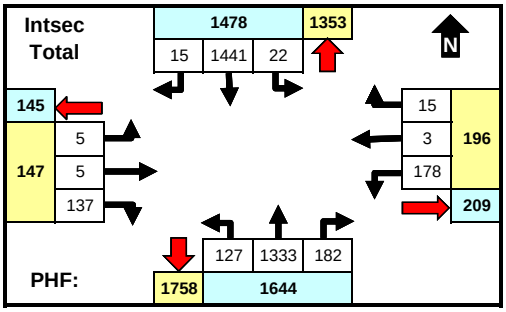

Comments

MID period defined as 10:00 AM - 2:00 PM. Peaks defined based on total intersection volume for all vehicle types.

	From North				From East				From South				From West				INTSEC
	N WILLIAMSON VALLEY				W STAZENSKI RD				N WILLIAMSON VALLEY				W STAZENSKI RD				
Time	LT	Thru	RT	U	LT	Thru	RT	U	LT	Thru	RT	U	LT	Thru	RT	U	TOTAL
06:00	0	17	0	0	0	0	0	0	0	7	1	0	0	0	2	0	27
06:15	1	17	0	0	4	0	0	0	0	8	0	0	0	0	5	0	35
06:30	0	20	0	0	3	0	0	0	0	26	2	0	0	0	3	0	54
06:45	0	30	0	0	5	0	1	0	0	26	5	0	0	0	2	0	69
07:00	0	37	0	0	6	0	0	0	1	27	2	0	0	0	2	0	75
07:15	0	35	0	0	2	0	1	0	3	26	3	0	1	0	2	0	73
07:30	1	42	1	0	10	0	1	0	2	43	3	0	0	1	8	0	112
07:45	0	36	0	0	9	0	0	0	1	31	2	0	0	0	7	0	86
08:00	2	35	0	0	7	0	1	0	3	35	9	0	0	0	6	0	98
08:15	1	29	0	0	1	0	0	0	2	32	5	0	0	0	4	0	74
08:30	0	36	0	0	6	0	1	0	0	33	4	0	1	0	4	0	85
08:45	1	36	0	0	3	0	0	0	2	26	3	0	0	0	1	0	72
09:00	0	34	0	0	2	0	0	0	3	28	3	0	0	0	4	0	74
09:15	0	43	0	0	3	0	0	0	3	24	4	0	0	1	1	0	79
09:30	0	28	0	0	7	0	1	0	0	29	3	0	1	0	3	0	72
09:45	0	32	0	0	2	0	0	0	1	24	4	0	0	0	1	0	64
10:00	2	36	2	0	2	0	0	0	2	22	2	0	0	1	1	0	70
10:15	0	35	0	0	4	0	0	0	2	23	0	0	0	0	4	0	68
10:30	4	27	0	0	2	0	0	0	1	24	1	0	1	0	2	0	62
10:45	3	39	1	0	1	0	0	0	1	21	4	0	0	0	3	0	73
11:00	0	44	1	0	1	0	0	0	1	27	4	0	0	0	4	0	82
11:15	0	44	1	0	2	0	0	0	4	27	3	0	0	0	2	0	83
11:30	0	42	0	0	9	0	0	0	4	27	3	0	1	1	1	0	88
11:45	1	18	1	0	1	0	1	0	1	34	6	0	0	0	5	0	68
12:00	0	30	0	0	2	0	0	0	4	40	5	0	0	0	2	0	83
12:15	1	35	0	0	7	0	0	0	6	16	5	0	0	0	4	0	74
12:30	0	31	0	0	2	1	0	0	2	26	3	0	0	0	5	0	70
12:45	1	25	0	0	6	1	0	0	5	28	6	0	0	0	2	0	74
13:00	0	22	1	0	5	0	0	0	0	30	1	0	0	0	4	0	63
13:15	0	33	1	0	3	0	0	0	6	20	4	0	0	0	4	0	71
13:30	0	25	0	0	4	0	1	0	1	29	3	0	0	0	1	0	64
13:45	1	32	1	0	0	0	1	0	6	29	5	0	0	0	3	0	78
14:00	0	24	2	0	3	0	0	0	3	30	5	1	0	0	4	0	72
14:15	0	36	0	0	3	0	0	0	3	29	3	0	0	1	4	0	79
14:30	0	34	1	0	1	0	1	0	4	29	4	0	0	0	0	0	74
14:45	0	25	2	0	4	0	0	0	6	38	6	0	0	0	2	0	83
15:00	0	27	0	0	5	0	0	0	2	30	7	0	0	0	4	0	75
15:15	1	23	0	0	6	0	1	0	5	33	5	0	0	0	1	0	75
15:30	0	33	0	0	5	0	1	0	1	29	5	0	0	0	6	0	80
15:45	0	35	0	0	9	0	0	0	2	26	4	0	0	0	0	0	76
16:00	0	37	0	0	5	0	0	0	6	34	9	0	0	0	2	0	93
16:15	0	28	0	0	3	0	1	0	2	22	6	0	0	0	2	0	64
16:30	0	17	0	0	3	0	0	0	4	35	5	0	0	0	4	0	68
16:45	0	20	0	0	5	0	0	0	5	42	5	0	0	0	2	0	79
17:00	0	27	0	0	0	1	0	0	5	29	1	0	0	0	1	0	64
17:15	1	17	0	0	2	0	0	0	7	28	6	1	0	0	1	0	63
17:30	0	15	0	0	2	0	2	0	2	28	1	0	0	0	2	0	52
17:45	1	18	0	0	1	0	0	0	3	23	2	0	0	0	0	0	48
12:00																	0
12:15																	0
12:30																	0
12:45																	0
13:00																	0
13:15																	0
13:30																	0
13:45																	0
14:00																	0
14:15																	0
14:30																	0
14:45																	0
15:00																	0
15:15																	0
15:30																	0
15:45																	0
16:00																	0
16:15																	0
16:30																	0
16:45																	0
17:00																	0
17:15																	0
17:30																	0
17:45																	0
18:00																	0
18:15																	0
18:30																	0
18:45																	0
19:00																	0
19:15																	0
19:30																	0
19:45																	0
20:00																	0
20:15																	0
20:30																	0
20:45																	0
21:00																	0
21:15																	0
21:30																	0
21:45																	0
22:00																	0
22:15																	0
22:30																	0
22:45																	0
23:00																	0
23:15																	0
23:30																	0
23:45																	0
Total	22	1441	15	0	178	3	15	0	127	1333	182	2	5	5	137	0	3465
AM Peak Hr:																	7:30
Pk Vol	4	142	1	0	27	0	2	0	8	141	19	0	0	1	25	0	370
PHF	2.000	1.183	4.000	n/a	1.481	n/a	2.000	n/a	1.500	1.220	1.895	n/a	n/a	4.000	1.280	n/a	0.826
MID Peak Hr:																	10:45
Pk Vol	3	169	3	0	13	0	0	0	10	102	14	0	1	1	10	0	326
PHF	4.000	1.041	1.333	n/a	2.769	n/a	n/a	n/a	1.600	1.059	1.143	n/a	4.000	4.000	1.600	n/a	0.926
PM Peak Hr:																	15:15
Pk Vol	0	0	0	0	0	0	0	0	0	0	0	0	0	0	0	0	324
PHF	n/a	n/a	n/a	n/a	n/a	n/a	n/a	n/a	n/a	n/a	n/a	n/a	n/a	n/a	n/a	n/a	0.871

TRAFFIC RESEARCH & ANALYSIS, INC.
Specializing in Traffic Data Collection

Traffic Research & Analysis, Inc.
3844 East Indian School Road
Phoenix, AZ 85018
(602) 840-1500

Intersection TMC: 1602991
Count Date: 5/19/2016

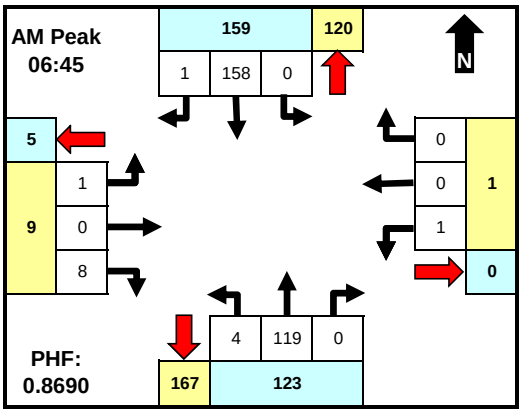

	From North				From East				From South				From West				INTSEC
	N WILLIAMSON VALLEY				N CIELO GRANDE				N WILLIAMSON VALLEY				N CIELO GRANDE				
Time	LT	Thru	RT	Ped	LT	Thru	RT	Ped	LT	Thru	RT	Ped	LT	Thru	RT	Ped	TOTAL
6:00	0	22	0	0	0	0	0	0	0	3	0	0	0	0	0	0	25
6:15	0	18	0	0	0	0	0	0	0	13	0	0	0	0	0	0	31
6:30	0	31	0	0	0	0	0	0	0	15	0	0	0	0	1	0	47
6:45	0	23	1	0	0	0	0	0	0	36	0	0	1	0	2	0	63
7:00	0	41	0	0	0	0	0	0	1	26	0	0	0	0	3	0	71
7:15	0	48	0	0	0	0	0	0	2	23	0	0	0	0	1	0	74
7:30	0	46	0	0	1	0	0	0	1	34	0	0	0	0	2	0	84
7:45	0	29	0	0	0	0	0	0	1	27	0	0	0	0	1	0	58
8:00	0	38	0	0	0	0	0	0	0	32	0	0	0	0	3	0	73
8:15	0	37	0	0	0	0	0	0	1	25	1	0	0	0	2	0	66
8:30	0	30	0	0	0	0	0	0	0	26	0	0	0	0	5	0	61
8:45	0	31	0	0	0	0	0	0	1	18	0	0	0	0	0	0	50
Total	0	394	1	0	1	0	0	0	7	278	1	0	1	0	20	0	703
Pk Hr																	6:45 AM
Pk Vol	0	158	1	0	1	0	0	0	4	119	0	0	1	0	8	0	292
PHF	0.000	0.823	0.250	0.000	0.250	0.000	0.000	0.000	0.500	0.826	0.000	0.000	0.250	0.000	0.667	0.000	0.869

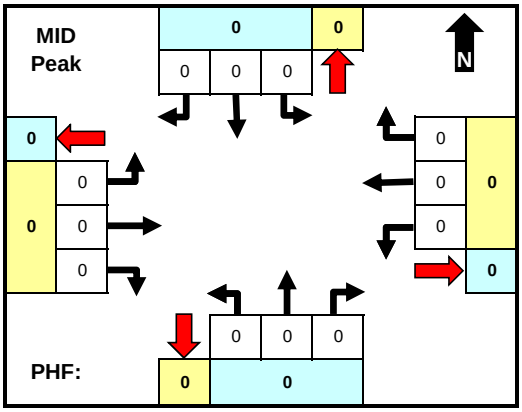

Time	LT	Thru	RT	Ped	LT	Thru	RT	Ped	LT	Thru	RT	Ped	LT	Thru	RT	Ped	TOTAL
Total	0	0	0	0	0	0	0	0	0	0	0	0	0	0	0	0	0
Pk Hr																	
Pk Vol																	
PHF																	

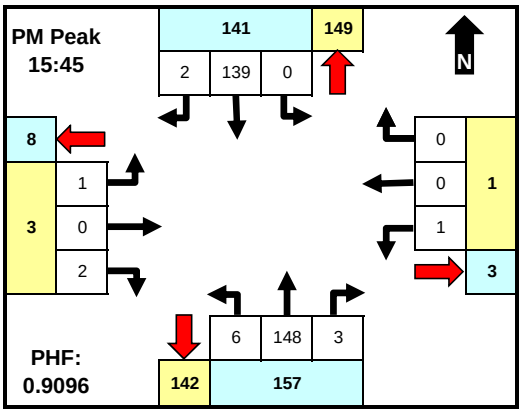

Time	LT	Thru	RT	Ped	LT	Thru	RT	Ped	LT	Thru	RT	Ped	LT	Thru	RT	Ped	TOTAL
15:30	1	35	0	0	2	0	0	0	3	38	1	0	0	0	0	0	80
15:45	0	38	0	0	1	0	0	0	1	36	1	0	1	0	0	0	78
16:00	0	34	0	0	0	0	0	0	1	43	1	0	0	0	0	0	79
16:15	0	28	1	0	0	0	0	0	3	28	1	0	0	0	1	0	62
16:30	0	39	1	0	0	0	0	0	1	41	0	0	0	0	1	0	83
16:45	0	23	1	0	0	0	0	0	4	41	1	0	0	0	1	0	71
17:00	0	37	0	0	0	0	0	0	0	28	0	0	0	0	3	0	68
17:15	0	40	3	0	0	0	0	0	0	30	0	0	0	1	1	0	75
17:30	0	19	0	0	0	0	0	0	1	32	1	0	0	0	1	0	54
17:45	0	25	0	0	0	0	0	0	0	44	0	0	0	0	0	0	69
18:00	0	20	0	0	0	0	0	0	0	21	0	0	0	0	1	0	42
18:15	0	21	0	0	0	0	0	0	3	25	0	0	0	0	2	0	51
Total	1	359	6	0	3	0	0	0	17	407	6	0	1	1	11	0	812
Pk Hr																	3:45 PM
Pk Vol	0	139	2	0	1	0	0	0	6	148	3	0	1	0	2	0	302
PHF	0.000	0.891	0.500	0.000	0.250	0.000	0.000	0.000	0.500	0.860	0.750	0.000	0.250	0.000	0.500	0.000	0.910

Intersection Statistics

Per	Peak Hour	Pk Hr Vol	Peak Intvl	Pk Intv Vol	PHF
AM	6:45 AM	292	7:30 AM	84	0.869
MID					
PM	3:45 PM	302	4:30 PM	83	0.910

Peak Hour Statistics by Approach

Per	Peak Hour	Vol	PHF	Peak Hour	Vol	PHF	Peak Hour	Vol	PHF	Peak Hour	Vol	PHF
AM	7:00 AM	164	0.854	6:45 AM	1	0.250	6:45 AM	123	0.854	7:45 AM	11	0.550
MID												
PM	4:30 PM	144	0.837	3:30 PM	3	0.375	4:00 PM	165	0.897	4:30 PM	7	0.583

Comments

Approach & Departure Volumes (No Peds)

Per	Approach	Depart	Approach	Depart	Approach	Depart	Approach	Depart
AM	395	279	1	1	286	415	21	8
MID	0	0	0	0	0	0	0	0
PM	366	408	3	8	430	373	13	23

TRAFFIC RESEARCH & ANALYSIS, INC.
Specializing in Traffic Data Collection

Traffic Research & Analysis, Inc.
3844 East Indian School Road
Phoenix, AZ 85018
(602) 840-1500

Intersection TMC: 1602992
Count Date: 5/19/2016

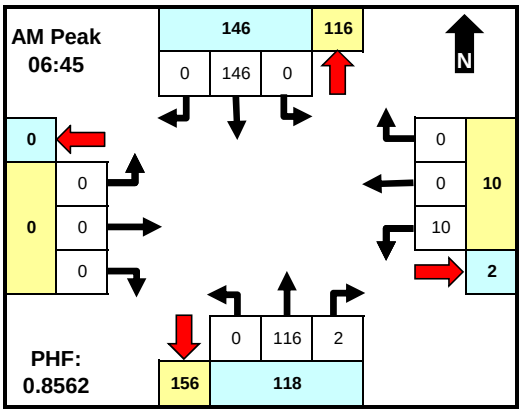

	From North				From East				From South				From West				INTSEC
	N WILLIAMSON VALLEY				MARLOW RD				N WILLIAMSON VALLEY				MARLOW RD				
Time	LT	Thru	RT	Ped	LT	Thru	RT	Ped	LT	Thru	RT	Ped	LT	Thru	RT	Ped	TOTAL
6:00	0	20	0	0	0	0	0	0	0	3	0	0	0	0	0	0	23
6:15	0	17	0	0	1	0	0	0	0	13	0	0	0	0	0	0	31
6:30	0	28	0	0	2	0	0	0	0	15	0	0	0	0	0	0	45
6:45	0	22	0	0	1	0	0	0	0	35	0	0	0	0	0	0	58
7:00	0	35	0	0	3	0	0	0	0	26	0	0	0	0	0	0	64
7:15	0	44	0	0	5	0	0	0	0	22	1	0	0	0	0	0	72
7:30	0	45	0	0	1	0	0	0	0	33	1	0	0	0	0	0	80
7:45	0	24	0	0	3	0	0	0	0	26	0	0	0	0	0	0	53
8:00	0	35	0	0	1	0	0	0	0	32	0	0	0	0	0	0	68
8:15	0	37	0	0	0	0	0	0	0	23	2	0	0	0	0	0	62
8:30	0	26	0	0	1	0	0	0	0	27	0	0	0	0	0	0	54
8:45	0	29	0	0	3	0	0	0	0	18	0	0	0	0	0	0	50
Total	0	362	0	0	21	0	0	0	0	273	4	0	0	0	0	0	660
Pk Hr																	6:45 AM
Pk Vol	0	146	0	0	10	0	0	0	0	116	2	0	0	0	0	0	274
PHF	0.000	0.811	0.000	0.000	0.500	0.000	0.000	0.000	0.000	0.829	0.500	0.000	0.000	0.000	0.000	0.000	0.856

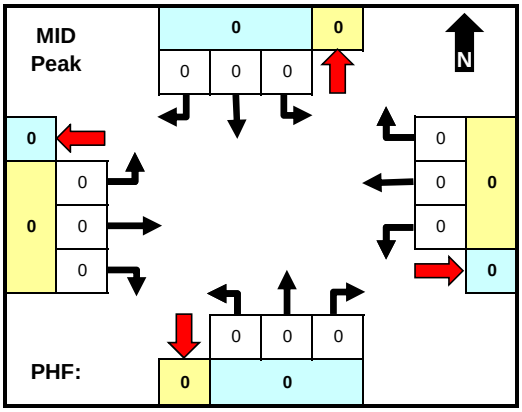

Time	LT	Thru	RT	Ped	LT	Thru	RT	Ped	LT	Thru	RT	Ped	LT	Thru	RT	Ped	TOTAL
Total	0	0	0	0	0	0	0	0	0	0	0	0	0	0	0	0	0
Pk Hr																	
Pk Vol																	
PHF																	

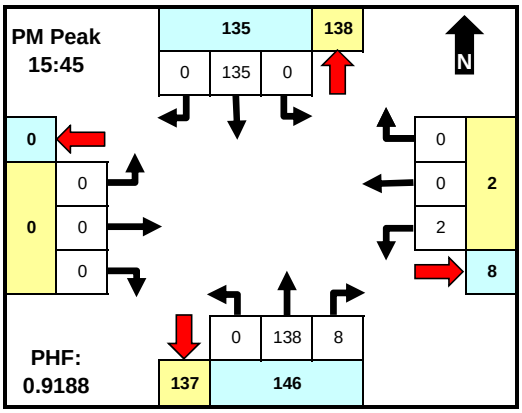

Time	LT	Thru	RT	Ped	LT	Thru	RT	Ped	LT	Thru	RT	Ped	LT	Thru	RT	Ped	TOTAL
15:30	0	33	0	0	1	0	0	0	0	37	1	0	0	0	0	0	72
15:45	0	36	0	0	1	0	0	0	0	34	2	0	0	0	0	0	73
16:00	0	32	0	0	1	0	0	0	0	42	1	0	0	0	0	0	76
16:15	0	29	0	0	0	0	0	0	0	27	1	0	0	0	0	0	57
16:30	0	38	0	0	0	0	0	0	0	35	4	0	0	0	0	0	77
16:45	0	22	0	0	1	0	0	0	0	39	1	0	0	0	0	0	63
17:00	0	40	0	0	0	0	1	0	0	28	3	0	0	0	0	0	72
17:15	0	40	0	0	1	0	0	0	0	29	0	0	0	0	0	0	70
17:30	0	18	0	0	0	0	0	0	0	26	2	0	0	0	0	0	46
17:45	0	24	0	0	2	0	0	0	0	43	4	0	0	0	0	0	73
18:00	0	18	0	0	0	0	0	0	0	20	2	0	0	0	0	0	40
18:15	0	23	0	0	0	0	0	0	0	22	0	0	0	0	0	0	45
Total	0	353	0	0	7	0	1	0	0	382	21	0	0	0	0	0	764
Pk Hr																	3:45 PM
Pk Vol	0	135	0	0	2	0	0	0	0	138	8	0	0	0	0	0	283
PHF	0.000	0.888	0.000	0.000	0.500	0.000	0.000	0.000	0.000	0.821	0.500	0.000	0.000	0.000	0.000	0.000	0.919

Intersection Statistics

Per	Peak Hour	Pk Hr Vol	Peak Intvl	Pk Intv Vol	PHF
AM	6:45 AM	274	7:30 AM	80	0.856
MID					
PM	3:45 PM	283	4:30 PM	77	0.919

Peak Hour Statistics by Approach

Per	Peak Hour	Vol	PHF	Peak Hour	Vol	PHF	Peak Hour	Vol	PHF	Peak Hour	Vol	PHF
AM	7:00 AM	148	0.822	7:00 AM	12	0.600	6:45 AM	118	0.843			
MID												
PM	4:30 PM	140	0.875	5:00 PM	4	0.500	4:00 PM	150	0.872			

Comments

Approach & Departure Volumes (No Peds)

Per	Approach	Depart	Approach	Depart	Approach	Depart	Approach	Depart
AM	362	273	21	4	277	383	0	0
MID	0	0	0	0	0	0	0	0
PM	353	383	8	21	403	360	0	0

TRAFFIC RESEARCH & ANALYSIS, INC.
Specializing in Traffic Data Collection

Traffic Research & Analysis, Inc.
3844 East Indian School Road
Phoenix, AZ 85018
(602) 840-1500

Intersection TMC: 1602993
Count Date: 5/19/2016

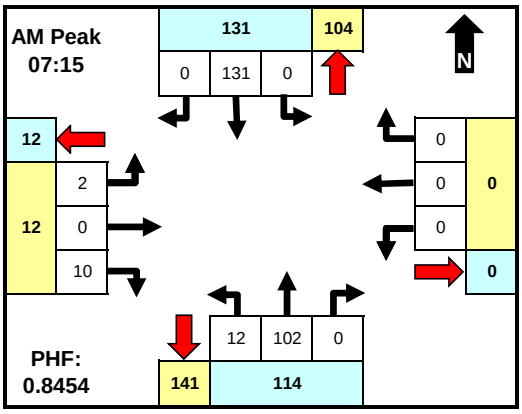

	From North				From East				From South				From West				INTSEC
	N WILLIAMSON VALLEY				WHISPERING CANYON D				N WILLIAMSON VALLEY				WHISPERING CANYON D				
Time	LT	Thru	RT	Ped	LT	Thru	RT	Ped	LT	Thru	RT	Ped	LT	Thru	RT	Ped	TOTAL
6:00	0	16	0	0	0	0	0	0	1	2	0	0	0	0	2	0	21
6:15	0	14	0	0	0	0	0	0	3	9	0	0	2	0	1	0	29
6:30	0	26	0	0	0	0	0	0	0	12	0	0	0	0	3	0	41
6:45	0	20	1	0	0	0	0	0	2	33	0	0	0	0	1	0	57
7:00	0	33	0	0	0	0	0	0	0	22	0	0	0	0	3	0	58
7:15	0	37	0	0	0	0	0	0	1	20	0	0	0	0	3	0	61
7:30	0	39	0	0	0	0	0	0	3	31	0	0	1	0	2	0	76
7:45	0	24	0	0	0	0	0	0	4	19	0	0	0	0	0	0	47
8:00	0	31	0	0	0	0	0	0	4	32	0	0	1	0	5	0	73
8:15	0	30	1	0	0	0	0	0	0	23	0	0	1	0	4	0	59
8:30	0	24	0	0	0	0	0	0	0	25	0	0	0	0	1	0	50
8:45	0	29	0	0	0	0	0	0	1	14	0	0	0	0	1	0	45
Total	0	323	2	0	0	0	0	0	19	242	0	0	5	0	26	0	617
Pk Hr																	7:15 AM
Pk Vol	0	131	0	0	0	0	0	0	12	102	0	0	2	0	10	0	257
PHF	0.000	0.840	0.000	0.000	0.000	0.000	0.000	0.000	0.750	0.797	0.000	0.000	0.500	0.000	0.500	0.000	0.845

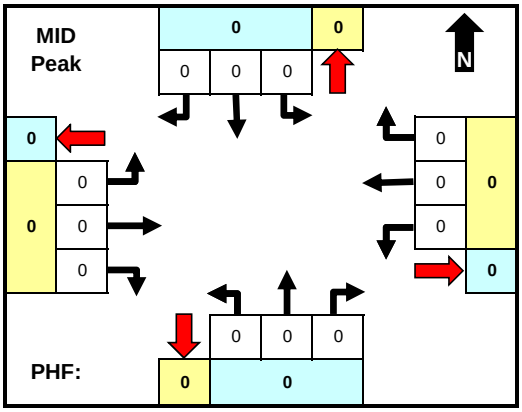

Time	LT	Thru	RT	Ped	LT	Thru	RT	Ped	LT	Thru	RT	Ped	LT	Thru	RT	Ped	TOTAL
Total	0	0	0	0	0	0	0	0	0	0	0	0	0	0	0	0	0
Pk Hr																	
Pk Vol																	
PHF																	

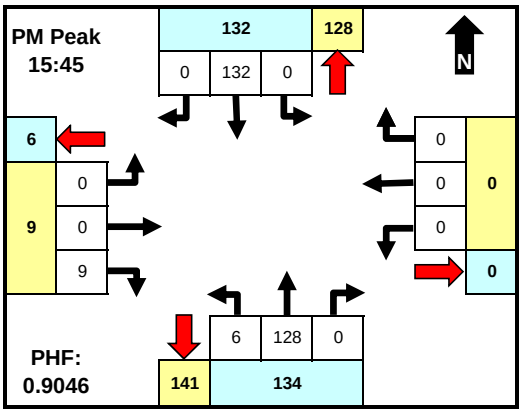

Time	LT	Thru	RT	Ped	LT	Thru	RT	Ped	LT	Thru	RT	Ped	LT	Thru	RT	Ped	TOTAL
15:30	0	31	0	0	0	0	0	0	2	32	0	0	0	0	2	0	67
15:45	0	36	0	0	0	0	0	0	1	37	0	0	0	0	1	0	75
16:00	0	32	0	0	0	0	0	0	1	39	0	0	0	0	4	0	76
16:15	0	24	0	0	0	0	0	0	3	22	0	0	0	0	3	0	52
16:30	0	40	0	0	0	0	0	0	1	30	0	0	0	0	1	0	72
16:45	0	19	1	0	0	0	0	0	2	39	0	0	1	0	2	0	64
17:00	0	32	0	0	0	0	0	0	4	24	0	0	0	0	3	0	63
17:15	0	36	0	0	0	0	0	0	2	25	0	0	2	0	2	0	67
17:30	0	16	0	0	0	0	0	0	2	18	0	0	0	0	0	0	36
17:45	0	21	0	0	0	0	0	0	4	37	1	0	0	0	3	0	66
18:00	0	15	0	0	0	0	0	0	1	18	0	0	0	0	2	0	36
18:15	0	22	0	0	0	0	0	0	1	23	0	0	0	0	1	0	47
Total	0	324	1	0	0	0	0	0	24	344	1	0	3	0	24	0	721
Pk Hr																	3:45 PM
Pk Vol	0	132	0	0	0	0	0	0	6	128	0	0	0	0	9	0	275
PHF	0.000	0.825	0.000	0.000	0.000	0.000	0.000	0.000	0.500	0.821	0.000	0.000	0.000	0.000	0.563	0.000	0.905

Intersection Statistics

Per	Peak Hour	Pk Hr Vol	Peak Intvl	Pk Intv Vol	PHF
AM	7:15 AM	257	7:30 AM	76	0.845
MID					
PM	3:45 PM	275	4:00 PM	76	0.905

Peak Hour Statistics by Approach

Per	Peak Hour	Vol	PHF	Peak Hour	Vol	PHF	Peak Hour	Vol	PHF	Peak Hour	Vol	PHF
AM	7:00 AM	133	0.853				7:30 AM	116	0.806	7:30 AM	14	0.583
MID												
PM	3:45 PM	132	0.825				3:30 PM	137	0.856	4:00 PM	11	0.688

Comments

Approach & Departure Volumes (No Peds)

Per	Approach	Depart	Approach	Depart	Approach	Depart	Approach	Depart
AM	325	247	0	0	261	349	31	21
MID	0	0	0	0	0	0	0	0
PM	325	347	0	1	369	348	27	25

TRAFFIC RESEARCH & ANALYSIS, INC.
Specializing in Traffic Data Collection

Traffic Research & Analysis, Inc.
3844 East Indian School Road
Phoenix, AZ 85018
(602) 840-1500

Intersection TMC: 1602966
Count Date: 4/7/2016

N WILLIAMSON VALLEY RD & ALMOSTA RANCH RD

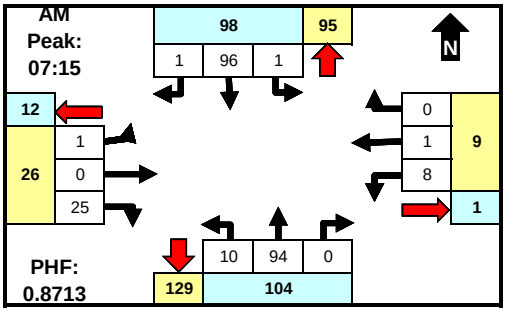

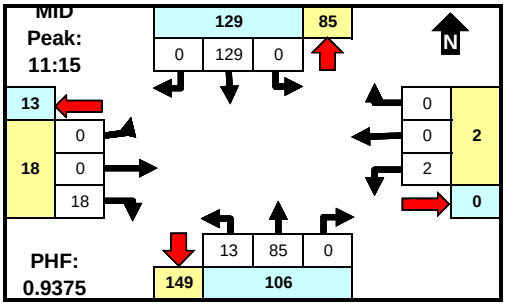

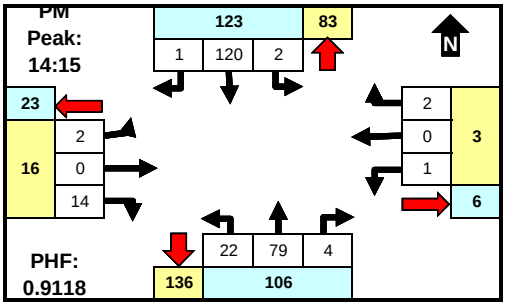

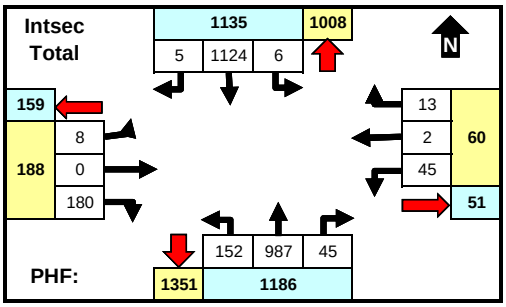

Comments

MID period defined as 10:00 AM - 2:00 PM. Peaks defined based on total intersection volume for all vehicle types.

	From North				From East				From South				From West				INTSEC
	N WILLIAMSON VALLEY				ALMOSTA RANCH RD				N WILLIAMSON VALLEY				ALMOSTA RANCH RD				
Time	LT	Thru	RT	U	LT	Thru	RT	U	LT	Thru	RT	U	LT	Thru	RT	U	TOTAL
06:00	0	15	0	0	0	0	2	0	0	6	1	0	0	0	0	0	24
06:15	0	16	1	0	0	0	2	0	0	5	1	0	0	0	2	0	27
06:30	0	16	0	0	0	0	2	0	2	16	0	0	0	0	2	0	38
06:45	0	22	0	0	0	0	1	0	3	23	0	0	0	0	2	0	51
07:00	0	24	0	0	2	0	0	0	6	13	0	0	0	0	2	0	47
07:15	0	27	0	0	2	0	0	0	1	23	0	0	0	0	7	0	60
07:30	1	24	1	0	1	0	0	0	4	30	0	0	0	0	7	0	68
07:45	0	20	0	0	1	1	0	0	2	23	0	0	0	0	4	0	51
08:00	0	25	0	0	4	0	0	0	3	18	0	0	1	0	7	0	58
08:15	0	22	0	0	2	0	0	0	2	20	0	0	0	0	6	0	52
08:30	0	20	0	0	4	0	0	0	3	18	0	0	0	0	2	0	47
08:45	0	23	0	0	3	0	0	0	3	22	0	0	0	0	1	0	52
09:00	0	15	0	0	2	0	0	0	2	10	0	0	1	0	4	0	34
09:15	0	27	0	0	1	0	0	0	2	18	0	0	1	0	9	0	58
09:30	0	22	0	0	2	0	0	0	2	17	1	0	0	0	3	0	47
09:45	0	25	0	0	2	0	0	0	3	26	1	0	0	0	4	0	61
10:00	0	19	0	0	0	0	0	0	3	14	1	0	0	0	3	0	40
10:15	0	19	0	0	0	0	0	0	3	18	2	0	0	0	8	0	50
10:30	0	22	0	0	2	0	0	0	2	27	0	0	0	0	5	0	58
10:45	0	24	0	0	3	0	0	0	3	20	1	0	0	0	4	0	55
11:00	1	21	0	0	0	0	0	0	2	15	0	0	0	0	5	0	44
11:15	0	33	0	0	0	0	0	0	3	23	1	0	0	0	6	0	66
11:30	0	34	0	0	0	0	0	0	5	24	2	0	0	0	3	0	68
11:45	0	31	0	0	1	0	0	0	5	16	3	0	0	0	5	0	61
12:00	0	31	0	0	1	0	0	0	0	22	2	0	0	0	4	0	60
12:15	0	24	1	0	1	0	0	0	1	26	0	0	0	0	3	0	56
12:30	0	27	0	0	0	0	0	0	3	29	1	0	0	0	8	0	68
12:45	1	20	0	0	0	0	0	0	4	18	1	0	0	0	4	0	48
13:00	0	33	0	0	2	0	0	0	3	29	0	0	0	0	2	0	69
13:15	0	17	0	0	0	0	0	0	3	20	1	0	0	0	0	0	41
13:30	1	28	1	0	1	1	1	0	10	27	1	0	0	0	5	0	76
13:45	0	19	0	0	1	0	0	0	6	23	0	0	0	0	4	0	53
14:00	0	24	0	0	0	0	1	0	2	19	0	0	1	0	0	0	47
14:15	1	27	1	0	0	0	0	0	4	24	1	0	0	0	5	0	63
14:30	1	30	0	0	1	0	1	0	9	17	0	0	0	0	4	0	63
14:45	0	25	0	0	0	0	0	0	5	18	1	1	0	0	4	0	54
15:00	0	38	0	0	0	0	1	0	4	20	2	0	2	0	1	0	68
15:15	0	26	0	0	0	0	0	0	2	24	3	1	0	0	5	0	61
15:30	0	28	0	0	0	0	1	0	0	10	1	0	0	0	2	0	42
15:45	0	20	0	0	1	0	0	0	2	28	1	0	1	0	1	0	54
16:00	0	24	0	0	0	0	0	0	4	17	1	0	0	0	4	0	50
16:15	0	22	0	0	2	0	0	0	5	38	1	0	0	0	2	0	70
16:30	0	20	0	0	0	0	0	0	4	35	2	0	1	0	1	0	63
16:45	0	26	0	0	2	0	0	0	3	18	3	0	0	0	0	0	52
17:00	0	15	0	0	0	0	0	0	1	23	1	0	0	0	9	0	49
17:15	0	13	0	0	1	0	0	0	5	24	4	0	0	0	5	0	52
17:30	0	20	0	0	0	0	0	0	6	13	4	0	0	0	4	0	47
17:45	0	21	0	0	0	0	1	0	2	20	0	0	0	0	2	0	46
12:00																	0
12:15																	0
12:30																	0
12:45																	0
13:00																	0
13:15																	0
13:30																	0
13:45																	0
14:00																	0
14:15																	0
14:30																	0
14:45																	0
15:00																	0
15:15																	0
15:30																	0
15:45																	0
16:00																	0
16:15																	0
16:30																	0
16:45																	0
17:00																	0
17:15																	0
17:30																	0
17:45																	0
18:00																	0
18:15																	0
18:30																	0
18:45																	0
19:00																	0
19:15																	0
19:30																	0
19:45																	0
20:00																	0
20:15																	0
20:30																	0
20:45																	0
21:00																	0
21:15																	0
21:30																	0
21:45																	0
22:00																	0
22:15																	0
22:30																	0
22:45																	0
23:00																	0
23:15																	0
23:30																	0
23:45																	0
Total	6	1124	5	0	45	2	13	0	152	987	45	2	8	0	180	0	2569
AM Peak Hr:																	7:15
Pk Vol	1	96	1	0	8	1	0	0	10	94	0	0	1	0	25	0	237
PHF	4.000	1.125	4.000	n/a	2.000	4.000	n/a	n/a	1.600	1.277	n/a	n/a	4.000	n/a	1.120	n/a	0.871
MID Peak Hr:																	11:15
Pk Vol	0	129	0	0	2	0	0	0	13	85	8	0	0	0	18	0	255
PHF	n/a	1.054	n/a	n/a	2.000	n/a	n/a	n/a	1.538	1.129	1.500	n/a	n/a	n/a	1.333	n/a	0.938
PM Peak Hr:																	14:15
Pk Vol	2	120	1	0	1	0	2	0	22	79	4	1	2	0	14	0	248
PHF	2.000	1.267	4.000	n/a	4.000	n/a	2.000	n/a	1.636	1.215	2.000	4.000	4.000	n/a	1.429	n/a	0.912

TRAFFIC RESEARCH & ANALYSIS, INC.
Specializing in Traffic Data Collection

Traffic Research & Analysis, Inc.
3844 East Indian School Road
Phoenix, AZ 85018
(602) 840-1500

Intersection TMC: 1602994
Count Date: 5/19/2016

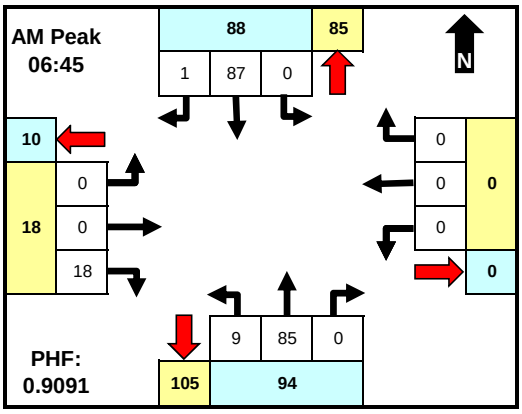

	From North				From East				From South				From West				INTSEC
	WILLIAMSON VALLEY R				INSCRIPTON CANYON D				WILLIAMSON VALLEY R				INSCRIPTON CANYON D				
Time	LT	Thru	RT	Ped	LT	Thru	RT	Ped	LT	Thru	RT	Ped	LT	Thru	RT	Ped	TOTAL
6:00	0	16	0	0	0	0	0	0	1	1	0	0	1	0	2	0	21
6:15	0	10	0	0	0	0	0	0	0	9	0	0	0	0	2	0	21
6:30	0	20	0	0	0	0	0	0	1	8	0	0	0	0	2	0	31
6:45	0	18	1	0	0	0	0	0	2	24	0	0	0	0	3	0	48
7:00	0	25	0	0	0	0	0	0	4	14	0	0	0	0	3	0	46
7:15	0	23	0	0	0	0	0	0	2	19	0	0	0	0	7	0	51
7:30	0	21	0	0	0	0	0	0	1	28	0	0	0	0	5	0	55
7:45	0	19	1	0	0	0	0	0	1	15	0	0	1	0	3	0	40
8:00	0	18	0	0	0	0	0	0	6	22	0	0	1	0	6	0	53
8:15	0	17	1	0	0	0	0	0	4	16	0	0	0	0	9	0	47
8:30	0	18	0	0	0	1	0	0	3	22	0	0	3	0	2	0	49
8:45	0	24	1	0	0	0	0	0	1	14	0	0	1	0	3	0	44
Total	0	229	4	0	0	1	0	0	26	192	0	0	7	0	47	0	506
Pk Hr																	6:45 AM
Pk Vol	0	87	1	0	0	0	0	0	9	85	0	0	0	0	18	0	200
PHF	0.000	0.870	0.250	0.000	0.000	0.000	0.000	0.000	0.563	0.759	0.000	0.000	0.000	0.000	0.643	0.000	0.909

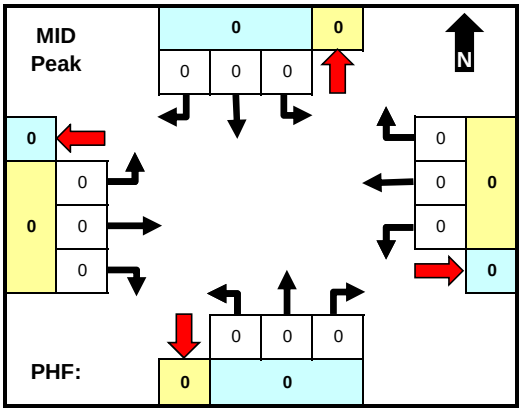

Time	LT	Thru	RT	Ped	LT	Thru	RT	Ped	LT	Thru	RT	Ped	LT	Thru	RT	Ped	TOTAL
Total	0	0	0	0	0	0	0	0	0	0	0	0	0	0	0	0	0
Pk Hr																	
Pk Vol																	
PHF																	

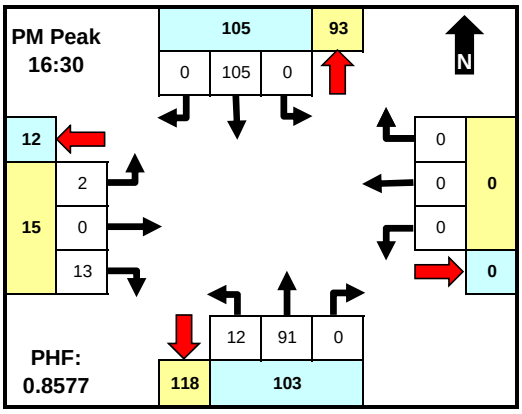

Time	LT	Thru	RT	Ped	LT	Thru	RT	Ped	LT	Thru	RT	Ped	LT	Thru	RT	Ped	TOTAL
15:30	0	27	1	0	0	0	0	0	4	23	0	0	0	0	3	0	58
15:45	0	24	0	0	0	0	0	0	7	25	0	0	0	0	0	0	56
16:00	0	25	2	0	0	0	0	0	4	23	0	0	0	0	1	0	55
16:15	0	18	0	0	0	0	0	0	1	23	0	0	0	0	1	0	43
16:30	0	33	0	0	0	0	0	0	3	24	0	0	2	0	3	0	65
16:45	0	12	0	0	0	0	0	0	5	26	0	0	0	0	7	0	50
17:00	0	33	0	0	0	0	0	0	2	20	0	0	0	0	1	0	56
17:15	0	27	0	0	0	0	0	0	2	21	0	0	0	0	2	0	52
17:30	0	14	0	0	0	0	0	0	0	17	0	0	0	0	1	0	32
17:45	0	14	2	0	0	0	0	0	3	25	0	0	0	0	5	0	49
18:00	0	9	0	0	0	0	0	0	2	16	0	0	0	0	2	0	29
18:15	0	17	0	0	0	0	0	0	2	16	0	0	0	0	0	0	35
Total	0	253	5	0	0	0	0	0	35	259	0	0	2	0	26	0	580
Pk Hr																	4:30 PM
Pk Vol	0	105	0	0	0	0	0	0	12	91	0	0	2	0	13	0	223
PHF	0.000	0.795	0.000	0.000	0.000	0.000	0.000	0.000	0.600	0.875	0.000	0.000	0.250	0.000	0.464	0.000	0.858

Intersection Statistics

Per	Peak Hour	Pk Hr Vol	Peak Intvl	Pk Intv Vol	PHF
AM	6:45 AM	200	7:30 AM	55	0.909
MID					
PM	4:30 PM	223	4:30 PM	65	0.858

Peak Hour Statistics by Approach

Per	Peak Hour	Vol	PHF	Peak Hour	Vol	PHF	Peak Hour	Vol	PHF	Peak Hour	Vol	PHF
AM	7:00 AM	89	0.890	7:45 AM	1	0.250	6:45 AM	94	0.810	7:30 AM	25	0.694
MID												
PM	4:30 PM	105	0.795				3:30 PM	110	0.859	4:30 PM	15	0.536

Comments

Approach & Departure Volumes (No Peds)

Per	Approach	Depart	Approach	Depart	Approach	Depart	Approach	Depart
AM	233	199	1	0	218	276	54	31
MID	0	0	0	0	0	0	0	0
PM	258	261	0	0	294	279	28	40

TRAFFIC RESEARCH & ANALYSIS, INC.
Specializing in Traffic Data Collection

Traffic Research & Analysis, Inc.
3844 East Indian School Road
Phoenix, AZ 85018
(602) 840-1500

Intersection TMC: 1602962
Count Date: 4/7/2016

N WILLIAMSON VALLEY RD & W NANCY DR

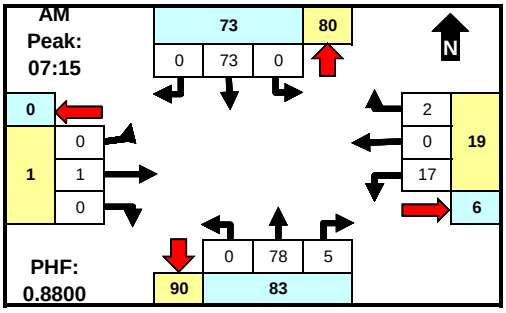

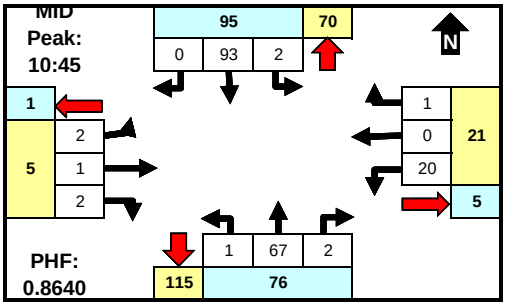

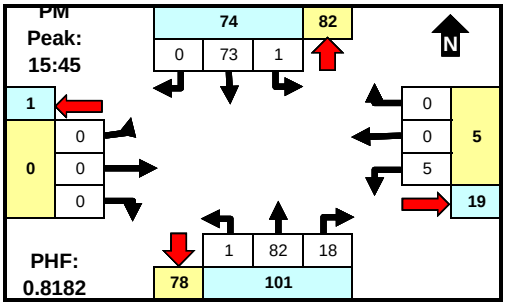

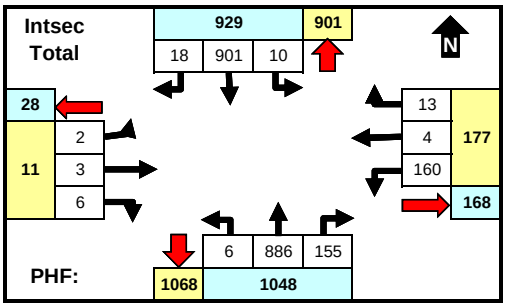

Comments

MID period defined as 10:00 AM - 2:00 PM. Peaks defined based on total intersection volume for all vehicle types.

	From North				From East				From South				From West				INTSEC
	N WILLIAMSON VALLEY				W NANCY DR				N WILLIAMSON VALLEY				W NANCY DR				
Time	LT	Thru	RT	U	LT	Thru	RT	U	LT	Thru	RT	U	LT	Thru	RT	U	TOTAL
00:00	0	0	0	0	0	0	0	0	0	0	0	0	0	0	0	0	0
00:15	0	0	0	0	0	0	0	0	0	0	0	0	0	0	0	0	0
00:30	0	0	0	0	0	0	0	0	0	0	0	0	0	0	0	0	0
00:45	0	0	0	0	0	0	0	0	0	0	0	0	0	0	0	0	0
01:00	0	0	0	0	0	0	0	0	0	0	0	0	0	0	0	0	0
01:15	0	0	0	0	0	0	0	0	0	1	1	0	0	0	0	0	2
01:30	0	0	0	0	0	0	0	0	0	0	0	0	0	0	0	0	0
01:45	0	0	0	0	0	0	0	0	0	0	0	0	0	0	0	0	0
02:00	0	0	0	0	0	0	0	0	0	0	0	0	0	0	0	0	0
02:15	0	0	0	0	0	0	0	0	0	0	1	0	0	0	0	0	1
02:30	0	0	0	0	0	0	0	0	0	0	0	0	0	0	0	0	0
02:45	0	0	0	0	0	0	0	0	0	0	0	0	0	0	0	0	0
03:00	0	0	0	0	0	0	1	0	0	1	1	0	0	0	0	0	3
03:15	0	0	0	0	1	0	0	0	0	2	0	0	0	0	0	0	3
03:30	0	0	0	0	0	0	0	0	0	0	0	0	0	0	0	0	0
03:45	0	0	0	0	0	0	0	0	0	0	0	0	0	0	0	0	0
04:00	0	0	0	0	0	0	0	0	0	0	0	0	0	0	0	0	0
04:15	0	1	0	0	0	0	0	0	0	1	0	0	0	0	1	0	3
04:30	0	0	0	0	0	0	0	0	0	0	0	0	0	0	0	0	0
04:45	0	0	0	0	0	0	0	0	0	4	0	0	0	0	0	0	4
05:00	0	4	1	0	1	0	0	0	0	6	2	0	0	0	0	0	14
05:15	0	1	0	0	3	0	1	0	0	5	4	0	0	0	0	0	14
05:30	0	3	0	0	0	0	0	0	0	3	0	0	0	0	0	0	6
05:45	0	4	0	0	2	0	0	0	0	5	1	0	0	0	0	0	12
06:00	0	5	0	0	5	0	1	0	0	2	3	0	0	0	0	0	16
06:15	0	14	0	0	3	0	0	0	0	2	0	0	0	0	0	0	19
06:30	0	12	0	0	5	0	0	0	0	14	0	0	0	0	0	0	31
06:45	0	15	0	0	6	0	0	0	0	20	1	0	0	0	0	0	42
07:00	0	7	0	0	5	0	0	0	0	12	1	0	0	0	0	0	25
07:15	0	17	0	0	3	0	0	0	0	17	0	0	0	0	0	0	37
07:30	0	19	0	0	3	0	0	0	0	26	1	0	0	1	0	0	50
07:45	0	18	0	0	3	0	2	0	0	17	3	0	0	0	0	0	43
08:00	0	19	0	0	8	0	0	0	0	18	1	0	0	0	0	0	46
08:15	0	17	0	0	2	0	0	0	0	15	0	0	0	0	0	0	34
08:30	0	15	0	0	3	0	2	0	0	19	1	0	0	1	0	0	41
08:45	0	13	0	0	3	0	0	0	1	18	0	0	0	0	0	0	35
09:00	0	26	0	0	4	0	0	0	0	12	2	0	0	0	0	0	44
09:15	0	16	0	0	5	0	0	0	1	16	0	0	0	0	0	0	38
09:30	0	21	0	0	1	0	0	0	0	10	1	0	0	0	0	0	33
09:45	0	23	0	0	3	0	0	0	0	17	1	0	0	0	0	0	44
10:00	0	19	0	0	2	0	2	0	1	10	2	0	0	0	0	0	36
10:15	0	17	0	0	2	0	0	0	0	12	6	0	0	0	0	0	37
10:30	0	16	0	0	5	0	0	0	0	21	2	0	0	0	0	0	44
10:45	0	28	0	0	2	0	0	0	0	20	1	0	0	0	0	0	51
11:00	0	16	0	0	3	0	1	0	0	11	4	0	0	0	0	0	35
11:15	0	27	0	0	6	0	0	0	1	16	1	0	2	0	1	0	54
11:30	2	22	0	0	9	0	0	0	0	20	2	0	0	1	1	0	57
11:45	0	16	0	0	6	0	0	0	0	13	1	1	0	0	0	0	37
12:00	2	15	0	0	4	0	0	0	0	19	4	0	0	0	2	0	46
12:15	0	18	0	0	3	0	0	0	0	17	5	0	0	0	0	0	43
12:30	0	21	0	0	1	0	0	0	0	13	3	0	0	0	0	0	38
12:45	0	17	0	0	3	0	0	0	0	14	2	0	0	0	0	0	36
13:00	0	19	0	0	1	0	0	0	0	24	6	0	0	0	1	0	51
13:15	0	13	1	0	0	0	0	0	0	11	2	0	0	0	0	0	27
13:30	0	17	0	0	5	0	0	0	0	12	3	0	0	0	0	0	37
13:45	1	15	0	0	3	1	0	0	0	15	3	0	0	0	0	0	38
14:00	0	24	0	0	3	0	0	0	0	15	6	0	0	0	0	0	48
14:15	0	21	0	0	3	1	0	0	0	18	1	0	0	0	0	0	44
14:30	0	24	0	0	3	0	0	0	0	9	5	0	0	0	0	0	41
14:45	1	16	0	0	3	0	0	0	0	13	0	0	0	0	0	0	33
15:00	1	31	0	0	3	0	0	0	0	17	3	0	0	0	0	0	55
15:15	0	20	0	0	3	0	0	0	0	15	2	0	0	0	0	0	40
15:30	0	24	0	0	1	0	0	0	0	10	2	0	0	0	0	0	37
15:45	0	16	0	0	1	0	0	0	0	18	4	0	0	0	0	0	39
16:00	1	23	0	0	0	0	0	0	0	13	2	0	0	0	0	0	39
16:15	0	19	0	0	3	0	0	0	0	25	8	0	0	0	0	0	55
16:30	0	15	0	0	1	0	0	0	1	26	4	0	0	0	0	0	47
16:45	0	20	0	0	1	0	0	0	0	11	3	0	0	0	0	0	35
17:00	1	14	0	0	3	0	0	0	0	21	4	0	0	0	0	0	43
17:15	0	6	0	0	2	0	1	0	0	18	5	0	0	0	0	0	32
17:30	0	16	0	0	0	0	0	0	0	8	3	0	0	0	0	0	27
17:45	0	17	0	0	4	0	0	0	0	15	4	0	0	0	0	0	40
18:00	0	9	0	0	0	0	2	0	0	13	4	0	0	0	0	0	28
18:15	0	8	0	0	0	0	0	0	0	10	0	0	0	0	0	0	18
18:30	0	2	0	0	1	0	0	0	0	12	1	0	0	0	0	0	16
18:45	1	2	0	0	0	0	0	0	0	5	0	0	0	0	0	0	8
19:00	0	3	0	0	1	0	0	0	0	7	0	0	0	0	0	0	11
19:15	0	0	0	0	0	0	0	0	0	15	3	0	0	0	0	0	18
19:30	0	2	0	0	0	0	0	0	0	6	5	0	0	0	0	0	13
19:45	0	2	0	0	0	1	0	0	0	4	2	0	0	0	0	0	9
20:00	0	1	1	0	0	0	0	0	0	9	1	0	0	0	0	0	12
20:15	0	0	3	0	0	0	0	0	0	5	0	0	0	0	0	0	8
20:30	0	0	5	0	0	0	0	0	0	4	0	0	0	0	0	0	9
20:45	0	0	0	0	0	0	0	0	0	4	2	0	0	0	0	0	6
21:00	0	0	1	0	0	0	0	0	0	1	1	0	0	0	0	0	3
21:15	0	0	0	0	0	0	0	0	0	7	2	0	0	0	0	0	9
21:30	0	0	0	0	0	0	0	0	1	6	1	0	0	0	0	0	8
21:45	0	0	1	0	0	0	0	0	0	3	1	0	0	0	0	0	5
22:00	0	0	2	0	0	0	0	0	0	2	0	0	0	0	0	0	4
22:15	0	0	0	0	0	0	0	0	0	3	1	0	0	0	0	0	4
22:30	0	0	2	0	0	0	0	0	0	2	2	0	0	0	0	0	6
22:45	0	0	1	0	0	0	0	0	0	1	0	0	0	0	0	0	2
23:00	0	0	0	0	0	1	0	0	0	1	0	0	0	0	0	0	2
23:15	0	0	0	0	0	0	0	0	0	2	1	0	0	0	0	0	3
23:30	0	0	0	0	0	0	0	0	0	1	0	0	0	0	0	0	1
23:45	0	0	0	0	0	0	0	0	0	0	0	0	0	0	0	0	0
Total	10	901	18	0	160	4	13	0	6	886	155	1	2	3	6	0	2165
AM Peak Hr:																	7:15
Pk Vol	0	73	0	0	17	0	2	0	0	78	5	0	0	1	0	0	176
PHF	n/a	1.041	n/a	n/a	1.882	n/a	4.000	n/a	n/a	1.333	2.400	n/a	n/a	4.000	n/a	n/a	0.880
MID Peak Hr:																	10:45
Pk Vol	2	93	0	0	20	0	1	0	1	67	8	0	2	1	2	0	197
PHF	4.000	1.204	n/a	n/a	1.800	n/a	4.000	n/a	4.000	1.194	2.000	n/a	4.000	4.000	2.000	n/a	0.864
PM Peak Hr:																	15:45
Pk Vol	1	73	0	0	5	0	0	0	1	82	18	0	0	0	0	0	180
PHF	4.000	1.260	n/a	n/a	2.400	n/a	n/a	n/a	4.000	1.268	1.778	n/a	n/a	n/a	n/a	n/a	0.818

APPENDIX B – PEAK HOUR VOLUME MAPS: 2016, 2025, 2040

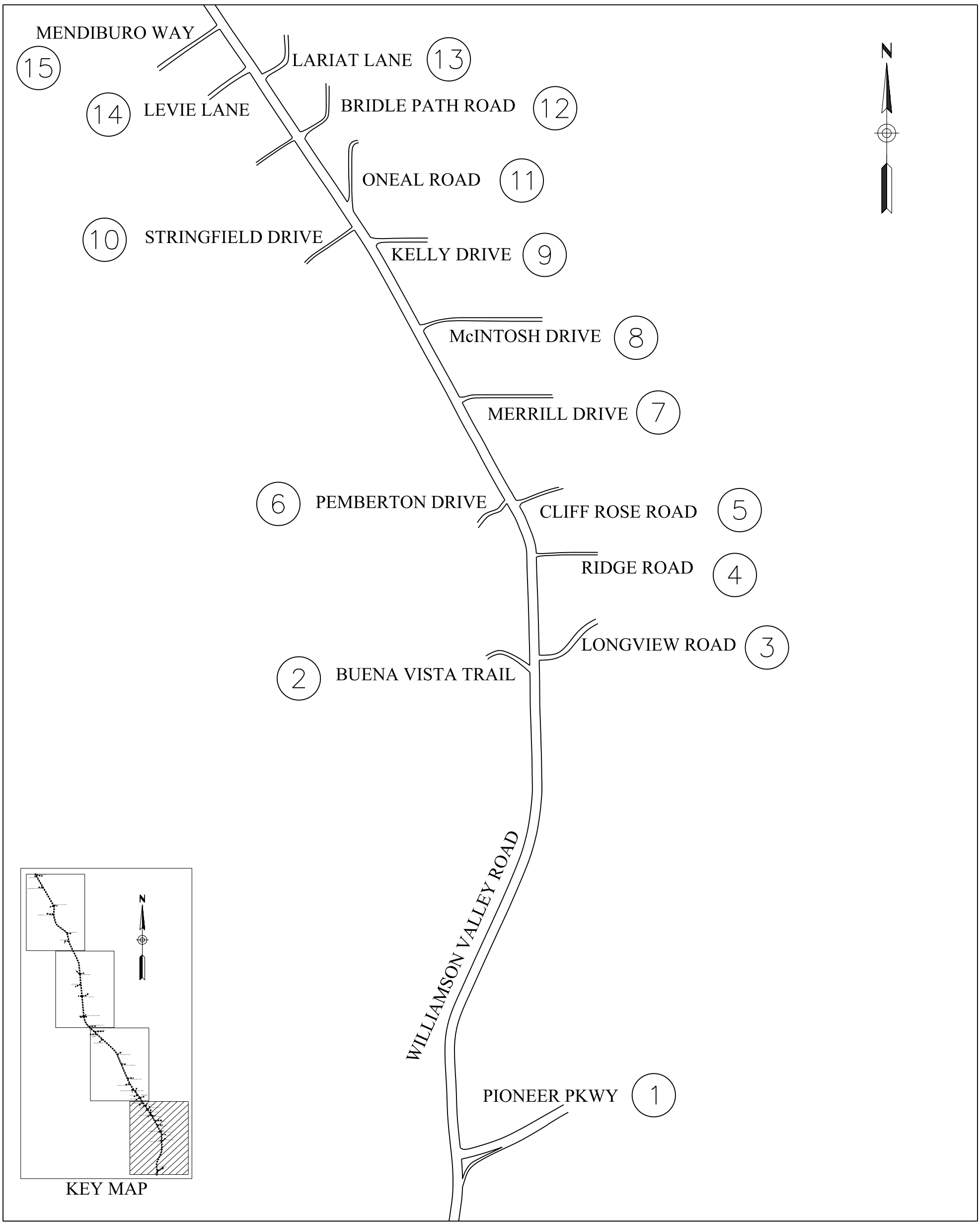

	AM Peak Hour Movements												PM Peak Hour Movements											
	Southbound			Westbound			Northbound			Eastbound			Southbound			Westbound			Northbound			Eastbound		
Location	Left	Thru	Right	Left	Thru	Right	Left	Thru	Right	Left	Thru	Right	Left	Thru	Right	Left	Thru	Right	Left	Thru	Right	Left	Thru	Right
1	228	488	--	226	--	110	--	143	159	--	--	--	106	156	--	121	--	193	--	296	152	--	--	--
2	--	699	0	--	--	--	2	237	--	0	--	9	--	357	0	--	--	--	11	480	--	2	--	1
3	0	693	--	35	--	5	--	212	12	--	--	--	0	248	--	18	--	2	--	511	25	--	--	--
4	1	630	--	4	--	0	--	256	4	--	--	--	1	333	--	0	--	1	--	443	4	--	--	--
5	0	555	--	5	--	1	--	233	4	--	--	--	0	235	--	3	--	0	--	490	6	--	--	--
6	--	555	1	--	--	--	6	233	--	2	--	17	--	235	3	--	--	--	12	490	--	5	--	7
7	3	604	--	14	--	2	--	243	6	--	--	--	1	322	--	7	--	1	--	429	10	--	--	--
8	2	600	--	19	--	0	--	213	7	--	--	--	0	315	--	5	--	3	--	418	6	--	--	--
9	0	569	--	16	--	0	--	233	7	--	--	--	1	306	--	6	--	1	--	411	10	--	--	--
10	--	557	2	--	--	--	3	225	--	0	--	4	--	307	1	--	--	--	0	415	--	1	--	3
11	0	621	--	7	--	3	--	199	1	--	--	--	1	276	--	3	--	3	--	452	8	--	--	--
12	0	589	0	4	0	0	0	188	2	2	0	5	1	136	2	0	0	1	0	305	8	1	1	1
13	0	551	--	4	--	0	--	197	2	--	--	--	0	293	--	4	--	0	--	390	3	--	--	--
14	--	519	1	--	--	--	4	217	--	2	--	15	--	281	0	--	--	--	6	377	--	1	--	11
15	--	512	0	--	--	--	0	219	--	0	--	7	--	288	0	--	--	--	2	372	--	1	--	3

3610 N. 44th Street
Suite 100
Phoenix, AZ 85018
602/955-7206
LEE ENGINEERING

Williamson Valley Road

Existing Count Data

Figure B 1.1

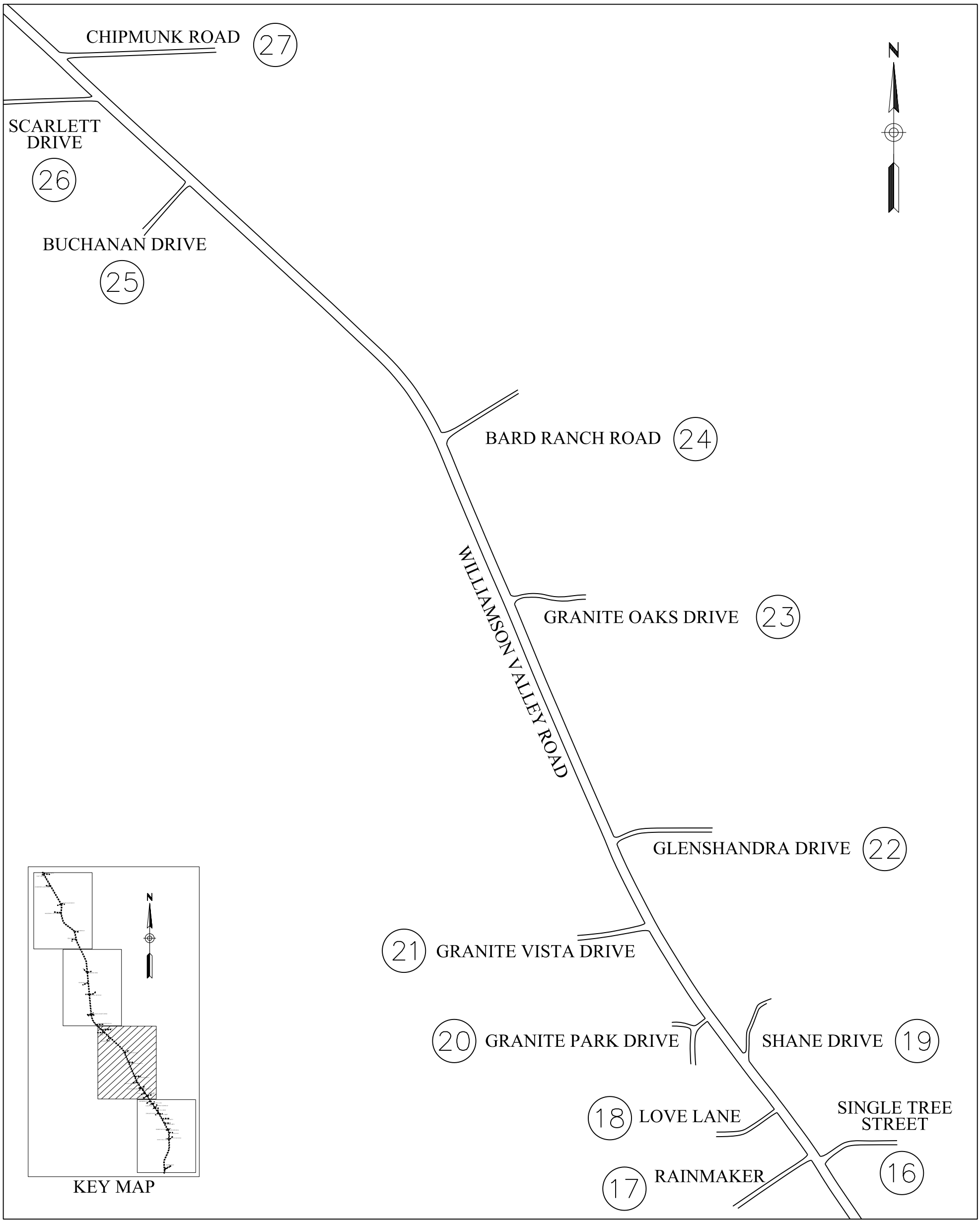

	AM Peak Hour Movements												PM Peak Hour Movements											
	Southbound			Westbound			Northbound			Eastbound			Southbound			Westbound			Northbound			Eastbound		
Location	Left	Thru	Right	Left	Thru	Right	Left	Thru	Right	Left	Thru	Right	Left	Thru	Right	Left	Thru	Right	Left	Thru	Right	Left	Thru	Right
16	2	541	--	23	--	4	--	188	5	--	--	--	3	254	--	9	--	2	--	391	19	--	--	--
17	--	541	1	--	--	--	2	188	--	1	--	16	--	254	4	--	--	--	9	391	--	2	--	8
18	--	532	1	--	--	--	0	193	--	1	--	9	--	254	3	--	--	--	5	387	--	1	--	7
19	1	525	--	4	--	0	--	194	1	--	--	--	0	247	--	4	--	0	--	384	4	--	--	--
20	--	513	0	--	--	--	0	191	--	0	--	6	--	242	1	--	--	--	3	382	--	1	--	5
21	--	510	1	--	--	--	0	191	--	2	--	2	--	240	2	--	--	--	5	376	--	1	--	1
22	2	467	--	34	--	1	--	172	13	--	--	--	3	213	--	11	--	4	--	304	31	--	--	--
23	4	404	1	30	0	3	2	173	7	0	1	1	3	253	0	19	0	4	2	280	20	1	0	0
24	8	400	--	31	--	4	--	162	13	--	--	--	5	191	--	19	--	7	--	299	26	--	--	--
25	--	405	0	--	--	--	5	160	--	0	--	7	--	189	0	--	--	--	7	296	--	1	--	4
26	--	370	0	--	--	--	0	176	--	1	--	2	--	187	0	--	--	--	7	299	--	1	--	4
27	2	391	--	6	--	1	--	154	3	--	--	--	5	191	--	0	--	1	--	304	4	--	--	--

3610 N. 44th Street
Suite 100
Phoenix, AZ 85018
602/955-7206
LEE ENGINEERING

Williamson Valley Road

Existing Count Data

Figure B 1.2

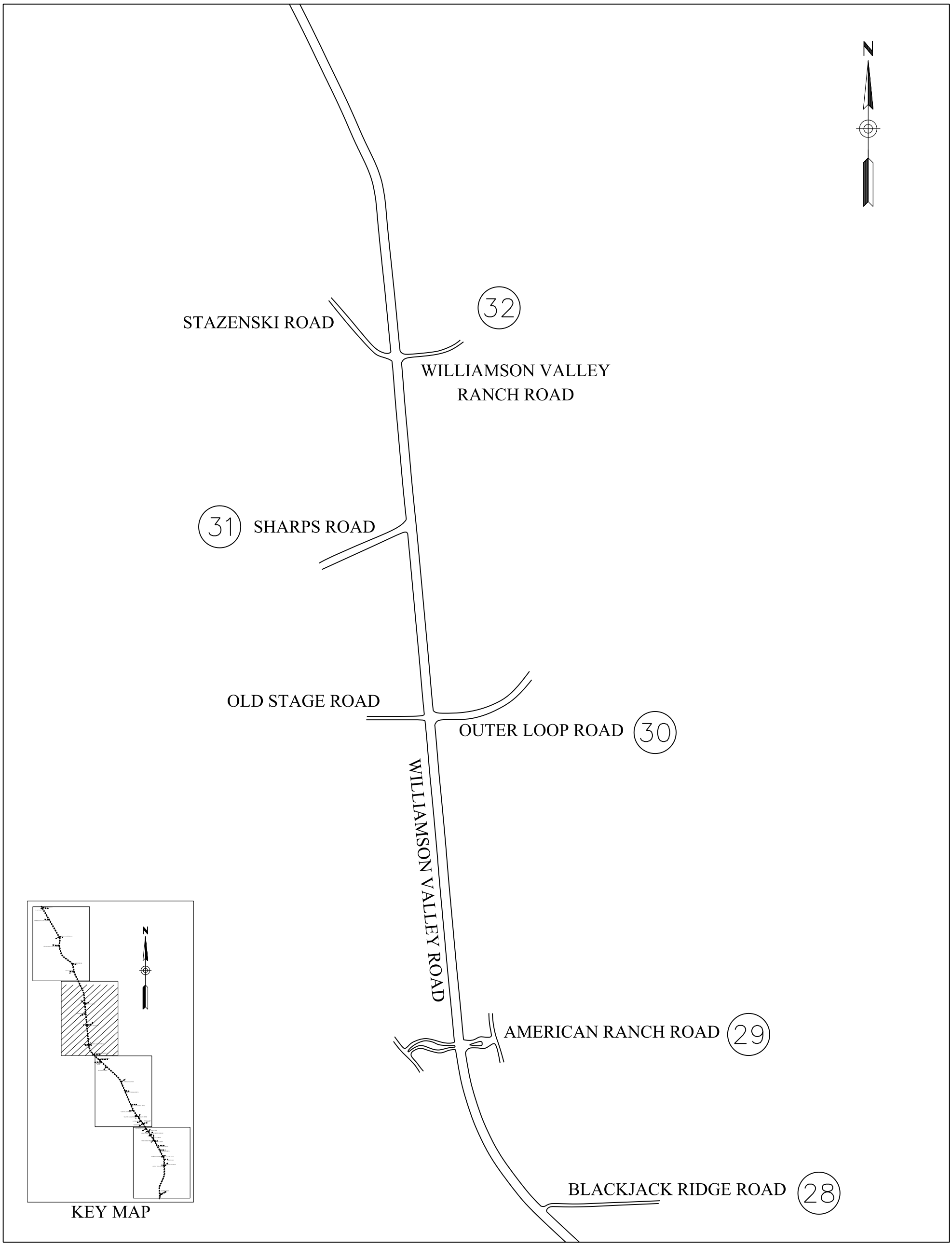

	AM Peak Hour Movements											
	Southbound			Westbound			Northbound			Eastbound		
Location	Left	Thru	Right	Left	Thru	Right	Left	Thru	Right	Left	Thru	Right
28	3	378	--	18	--	5	--	149	7	--	--	--
29	0	361	5	1	0	0	16	138	0	2	0	17
30	59	168	0	155	0	60	0	73	66	0	1	2
31	--	170	1	--	--	--	14	152	--	1	--	26
32	4	142	1	27	0	2	8	141	19	0	1	25

	PM Peak Hour Movements											
	Southbound			Westbound			Northbound			Eastbound		
Location	Left	Thru	Right	Left	Thru	Right	Left	Thru	Right	Left	Thru	Right
28	2	182	--	15	--	4	--	288	15	--	--	--
29	0	150	3	0	0	0	7	242	1	3	0	13
30	48	73	0	58	1	64	2	143	113	0	0	1
31	--	182	1	--	--	--	14	158	--	0	--	11
32	1	128	0	25	0	2	14	122	23	0	0	9

3610 N. 44th Street
Suite 100
Phoenix, AZ 85018
602/955-7206
LEE ENGINEERING

Williamson Valley Road

Existing Count Data

Figure B 1.3

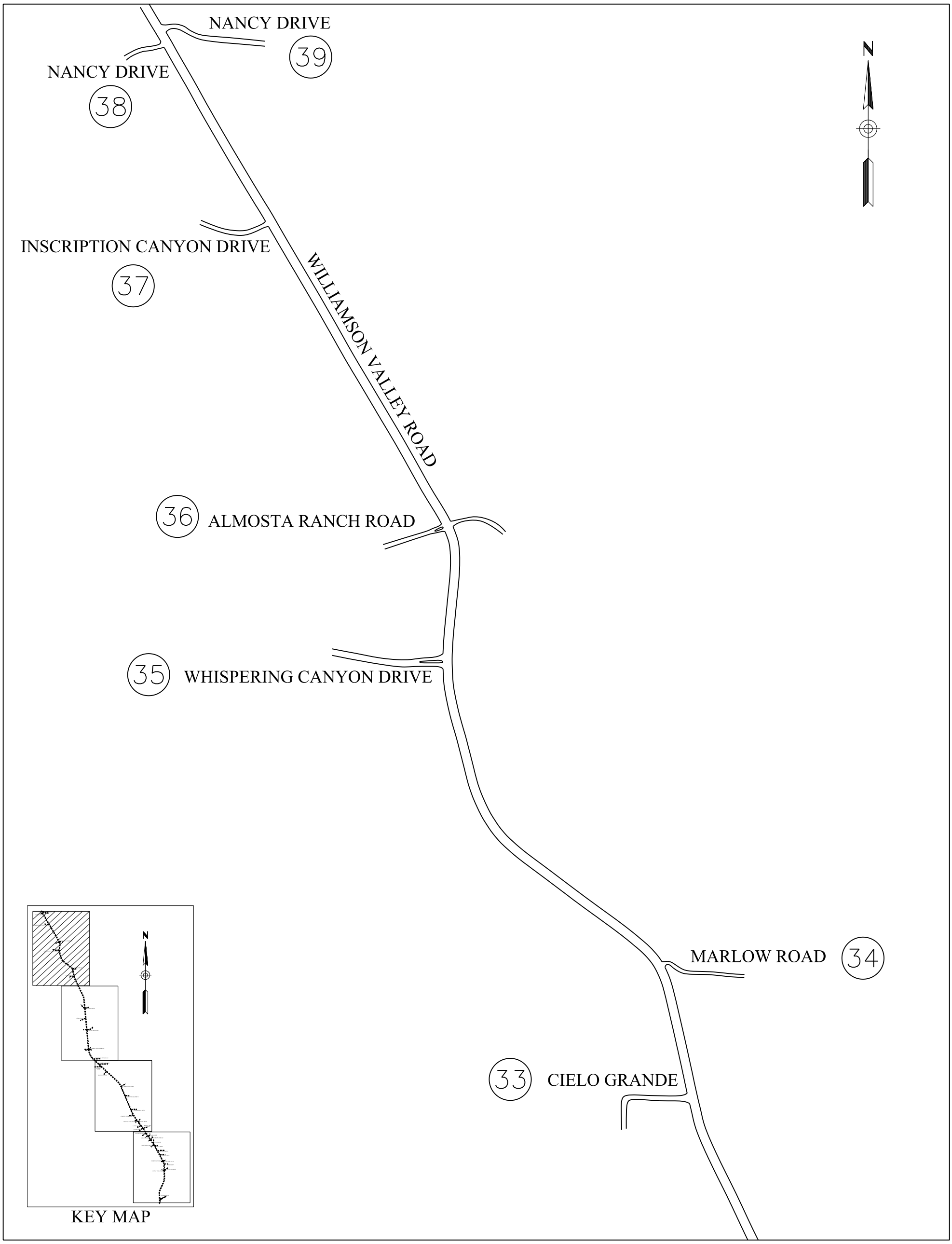

	AM Peak Hour Movements											
	Southbound			Westbound			Northbound			Eastbound		
Location	Left	Thru	Right	Left	Thru	Right	Left	Thru	Right	Left	Thru	Right
33	--	158	1	--	--	--	4	119	--	1	--	8
34	0	146	--	10	--	0	--	116	2	--	--	--
35	--	131	0	--	--	--	12	102	--	2	--	10
36	1	96	1	8	1	0	10	94	0	1	0	25
37	--	87	1	--	--	--	9	85	--	0	--	18
38	--	73	0	--	--	--	0	78	--	0	--	0
39	0	73	--	17	--	2	--	78	5	--	--	--

	PM Peak Hour Movements											
	Southbound			Westbound			Northbound			Eastbound		
Location	Left	Thru	Right	Left	Thru	Right	Left	Thru	Right	Left	Thru	Right
33	--	139	2	--	--	--	6	148	--	1	--	2
34	0	135	--	2	--	0	--	138	8	--	--	--
35	--	132	0	--	--	--	6	128	--	0	--	9
36	2	120	1	1	0	2	22	79	4	2	0	14
37	--	105	0	--	--	--	12	91	--	2	--	13
38	--	73	0	--	--	--	1	82	--	0	--	0
39	1	73	--	5	--	0	--	82	18	--	--	--

3610 N. 44th Street
Suite 100
Phoenix, AZ 85018
602/955-7206
LEE ENGINEERING

Williamson Valley Road

Existing Count Data

Figure B 1.4

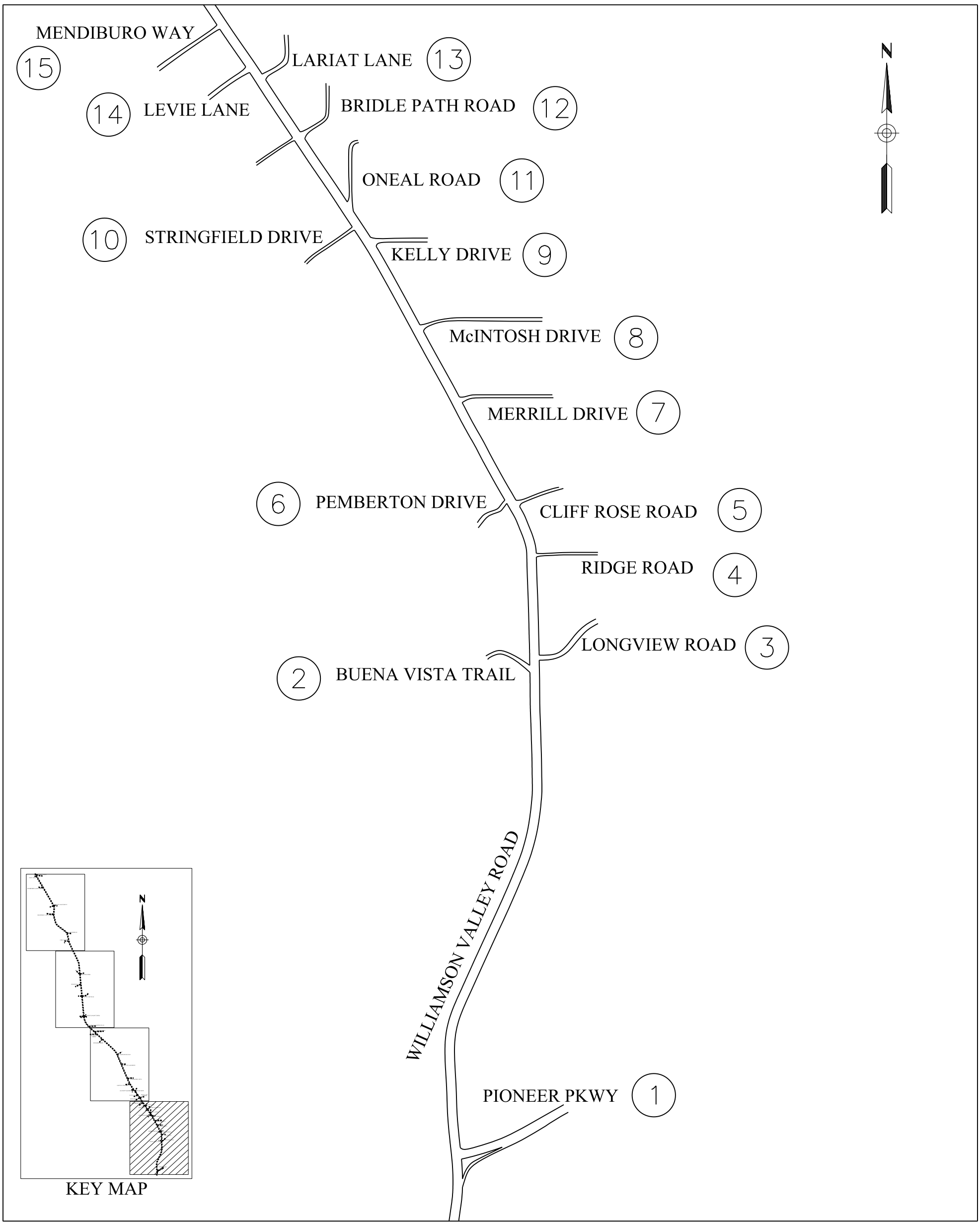

Location	AM Peak Hour Movements											
	Southbound			Westbound			Northbound			Eastbound		
	Left	Thru	Right	Left	Thru	Right	Left	Thru	Right	Left	Thru	Right
1	228	488	--	226	--	110	--	143	159	--	--	--
2	--	699	0	--	--	--	2	260	--	0	--	9
3	0	645	--	35	--	5	--	250	12	--	--	--
4	1	630	--	4	--	0	--	256	4	--	--	--
5	0	615	--	5	--	1	--	233	4	--	--	--
6	--	615	1	--	--	--	6	233	--	2	--	17
7	3	604	--	14	--	2	--	243	6	--	--	--
8	2	600	--	19	--	0	--	235	7	--	--	--
9	0	569	--	16	--	0	--	233	7	--	--	--
10	--	580	2	--	--	--	3	225	--	0	--	4
11	0	590	--	7	--	3	--	199	1	--	--	--
12	0	589	0	4	0	0	0	188	2	2	0	5
13	0	570	--	4	--	0	--	197	2	--	--	--
14	--	560	1	--	--	--	4	217	--	2	--	15
15	--	550	0	--	--	--	0	219	--	0	--	7

Location	PM Peak Hour Movements											
	Southbound			Westbound			Northbound			Eastbound		
	Left	Thru	Right	Left	Thru	Right	Left	Thru	Right	Left	Thru	Right
1	140	220	--	121	--	193	--	296	152	--	--	--
2	--	357	0	--	--	--	11	480	--	2	--	1
3	0	340	--	18	--	2	--	480	25	--	--	--
4	1	333	--	0	--	1	--	500	4	--	--	--
5	0	330	--	3	--	0	--	490	6	--	--	--
6	--	330	3	--	--	--	12	480	--	5	--	7
7	1	322	--	7	--	1	--	450	10	--	--	--
8	0	315	--	5	--	3	--	418	6	--	--	--
9	1	306	--	6	--	1	--	411	10	--	--	--
10	--	290	1	--	--	--	0	415	--	1	--	3
11	1	276	--	3	--	3	--	400	8	--	--	--
12	1	280	2	0	0	1	0	390	8	1	1	1
13	0	293	--	4	--	0	--	390	3	--	--	--
14	--	281	0	--	--	--	6	377	--	1	--	11
15	--	270	0	--	--	--	2	372	--	1	--	3

3610 N. 44th Street
Suite 100
Phoenix, AZ 85018
602/955-7206
LEE ENGINEERING

Williamson Valley Road

Adjusted 2016 Count Data

Figure B 2.1

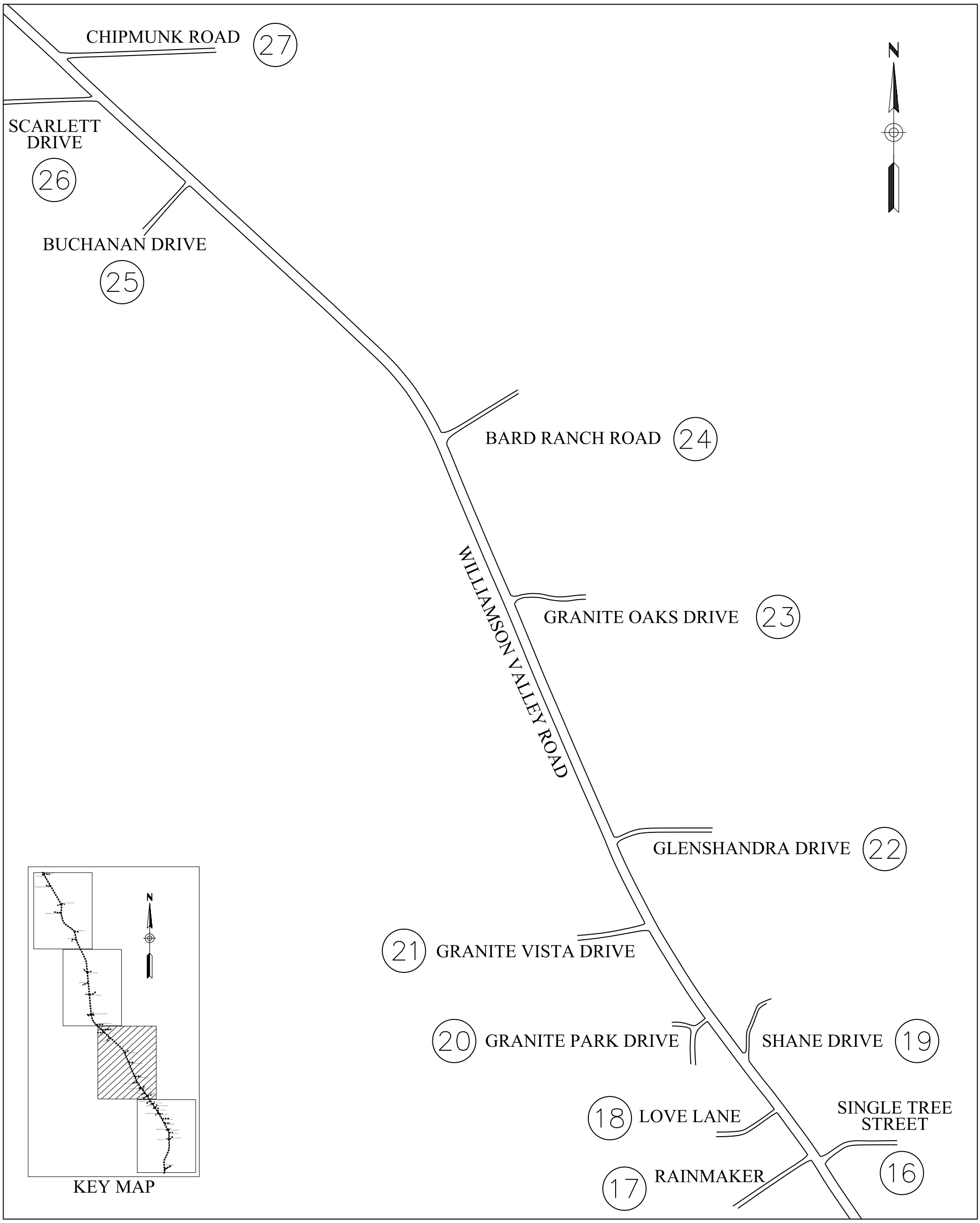

Location	AM Peak Hour Movements											
	Southbound			Westbound			Northbound			Eastbound		
	Left	Thru	Right	Left	Thru	Right	Left	Thru	Right	Left	Thru	Right
16	2	541	--	23	--	4	--	188	5	--	--	--
17	--	541	1	--	--	--	2	188	--	1	--	16
18	--	532	1	--	--	--	0	193	--	1	--	9
19	1	525	--	4	--	0	--	194	1	--	--	--
20	--	513	0	--	--	--	0	191	--	0	--	6
21	--	510	1	--	--	--	0	191	--	2	--	2
22	2	467	--	34	--	1	--	172	13	--	--	--
23	4	425	1	30	0	3	2	173	7	0	1	1
24	8	400	--	31	--	4	--	162	13	--	--	--
25	--	405	0	--	--	--	5	160	--	0	--	7
26	--	400	0	--	--	--	0	160	--	1	--	2
27	2	391	--	6	--	1	--	154	3	--	--	--

	PM Peak Hour Movements											
	Southbound			Westbound			Northbound			Eastbound		
	Left	Thru	Right	Left	Thru	Right	Left	Thru	Right	Left	Thru	Right
16	3	254	--	9	--	2	--	391	19	--	--	--
17	--	254	4	--	--	--	9	391	--	2	--	8
18	--	254	3	--	--	--	5	387	--	1	--	7
19	0	247	--	4	--	0	--	384	4	--	--	--
20	--	242	1	--	--	--	3	382	--	1	--	5
21	--	240	2	--	--	--	5	376	--	1	--	1
22	3	213	--	11	--	4	--	350	31	--	--	--
23	3	200	0	19	0	4	2	330	20	1	0	0
24	5	191	--	19	--	7	--	299	26	--	--	--
25	--	189	0	--	--	--	7	296	--	1	--	4
26	--	187	0	--	--	--	7	299	--	1	--	4
27	5	191	--	0	--	1	--	304	4	--	--	--

3610 N. 44th Street
Suite 100
Phoenix, AZ 85018
602/955-7206
LEE ENGINEERING

Williamson Valley Road

Adjusted 2016 Count Data

Figure B 2.2

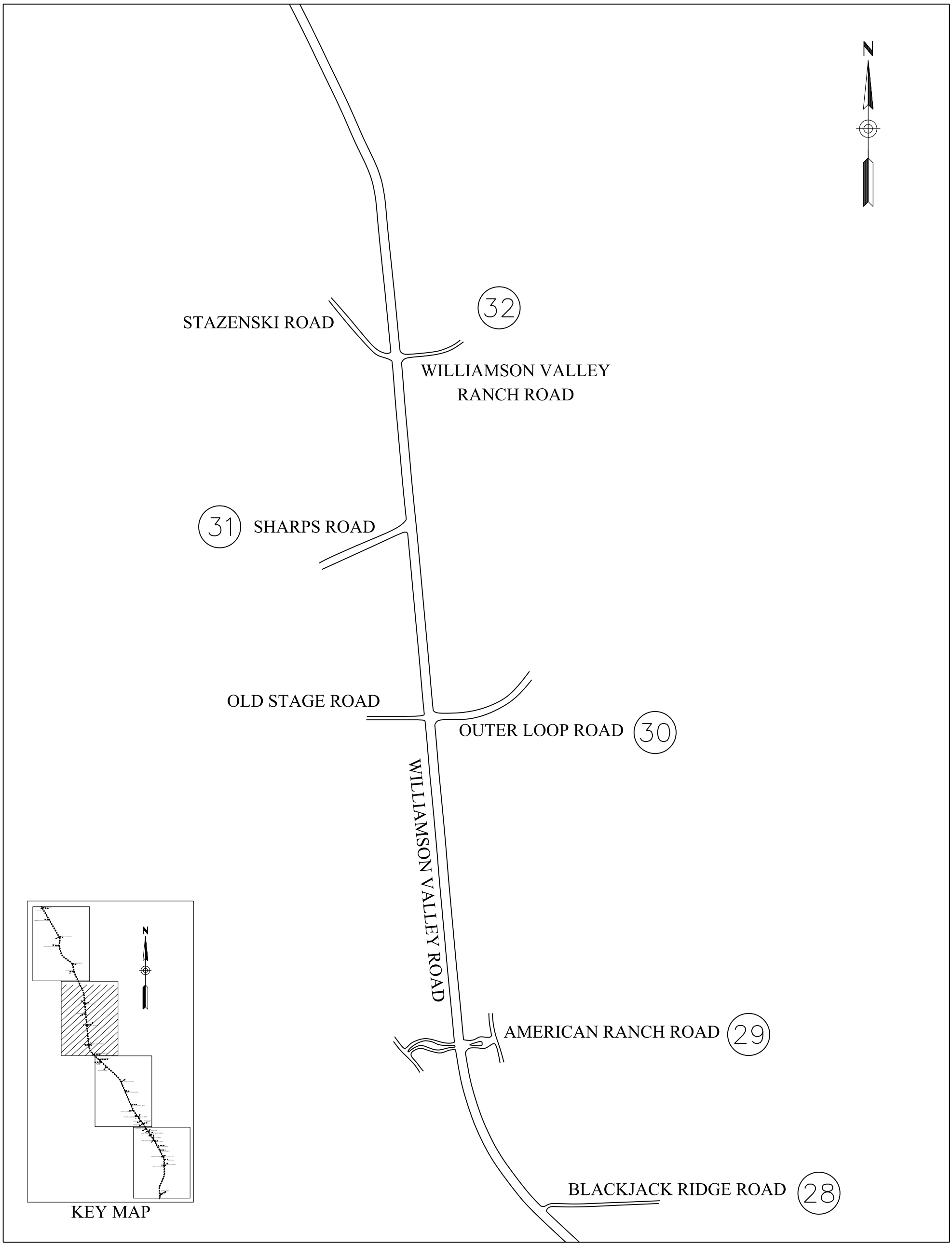

Location	AM Peak Hour Movements											
	Southbound			Westbound			Northbound			Eastbound		
	Left	Thru	Right	Left	Thru	Right	Left	Thru	Right	Left	Thru	Right
28	3	378	--	18	--	5	--	149	7	--	--	--
29	0	361	5	1	0	0	16	138	0	2	0	17
30	59	168	0	155	0	60	0	73	66	0	1	2
31	--	170	1	--	--	--	14	152	--	1	--	26
32	4	142	1	27	0	2	8	141	19	0	1	25

PM Peak Hour Movements											
Southbound			Westbound			Northbound			Eastbound		
Left	Thru	Right	Left	Thru	Right	Left	Thru	Right	Left	Thru	Right
2	182	--	15	--	4	--	288	15	--	--	--
0	150	3	0	0	0	7	260	1	3	0	13
65	100	0	58	1	64	2	143	113	0	0	1
--	160	1	--	--	--	14	175	--	0	--	11
1	128	0	25	0	2	14	122	23	0	0	9

3610 N. 44th Street
Suite 100
Phoenix, AZ 85018
602/955-7206
LEE ENGINEERING

Williamson Valley Road

Adjusted 2016 Count Data

Figure B 2.3

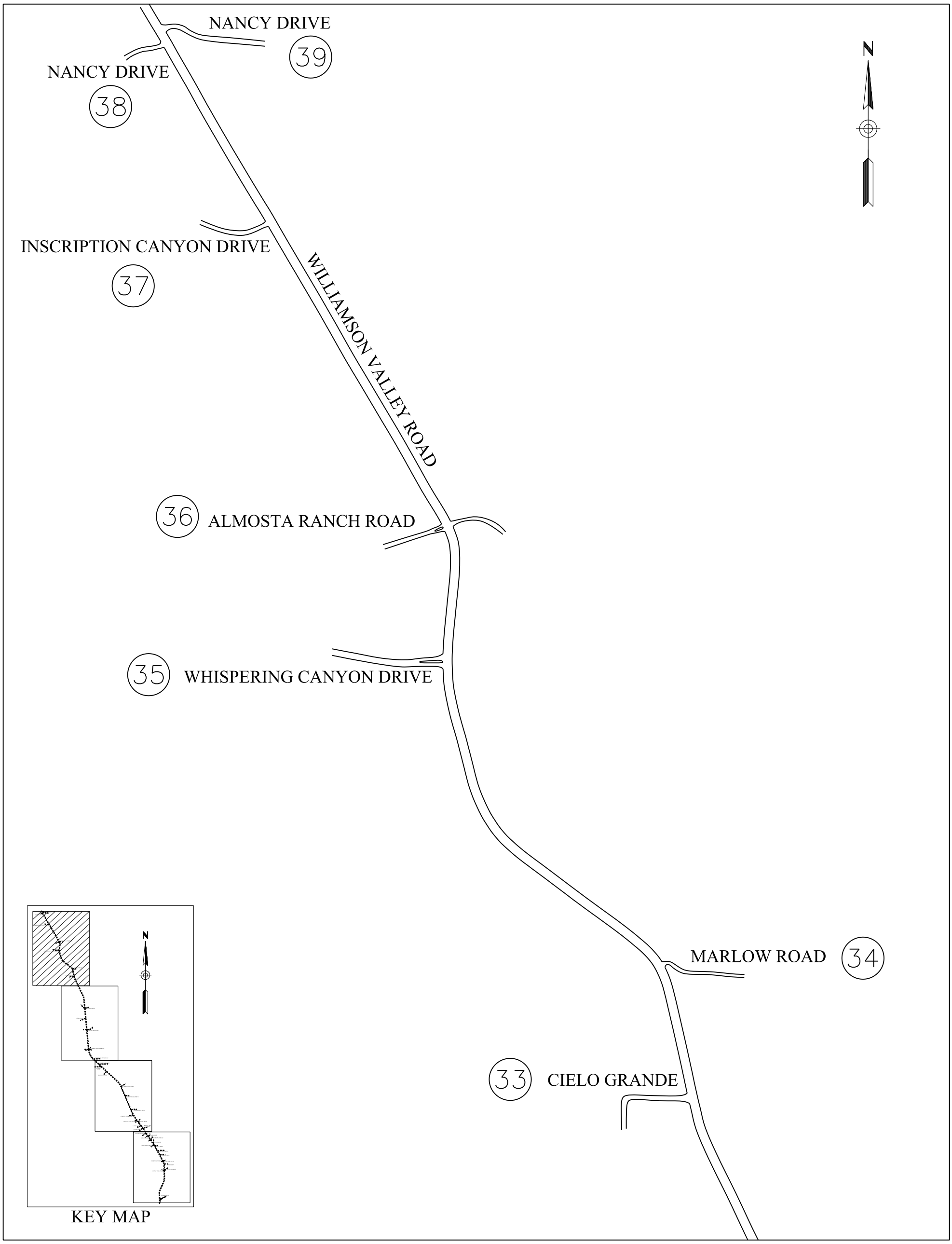

Location	AM Peak Hour Movements											
	Southbound			Westbound			Northbound			Eastbound		
	Left	Thru	Right	Left	Thru	Right	Left	Thru	Right	Left	Thru	Right
33	--	158	1	--	--	--	4	119	--	1	--	8
34	0	146	--	10	--	0	--	116	2	--	--	--
35	--	131	0	--	--	--	12	102	--	2	--	10
36	1	96	1	8	1	0	10	94	0	1	0	25
37	--	87	1	--	--	--	9	85	--	0	--	18
38	--	85	0	--	--	--	0	78	--	0	--	0
39	0	73	--	17	--	2	--	78	5	--	--	--

PM Peak Hour Movements											
Southbound			Westbound			Northbound			Eastbound		
Left	Thru	Right	Left	Thru	Right	Left	Thru	Right	Left	Thru	Right
--	139	2	--	--	--	6	148	--	1	--	2
0	135	--	2	--	0	--	138	8	--	--	--
--	132	0	--	--	--	6	128	--	0	--	9
2	120	1	1	0	2	22	100	4	2	0	14
--	105	0	--	--	--	12	91	--	2	--	13
--	100	0	--	--	--	1	82	--	0	--	0
1	95	--	5	--	0	--	64	18	--	--	--

3610 N. 44th Street
Suite 100
Phoenix, AZ 85018
602/955-7206
LEE ENGINEERING

Williamson Valley Road

Adjusted 2016 Count Data

Figure B 2.4

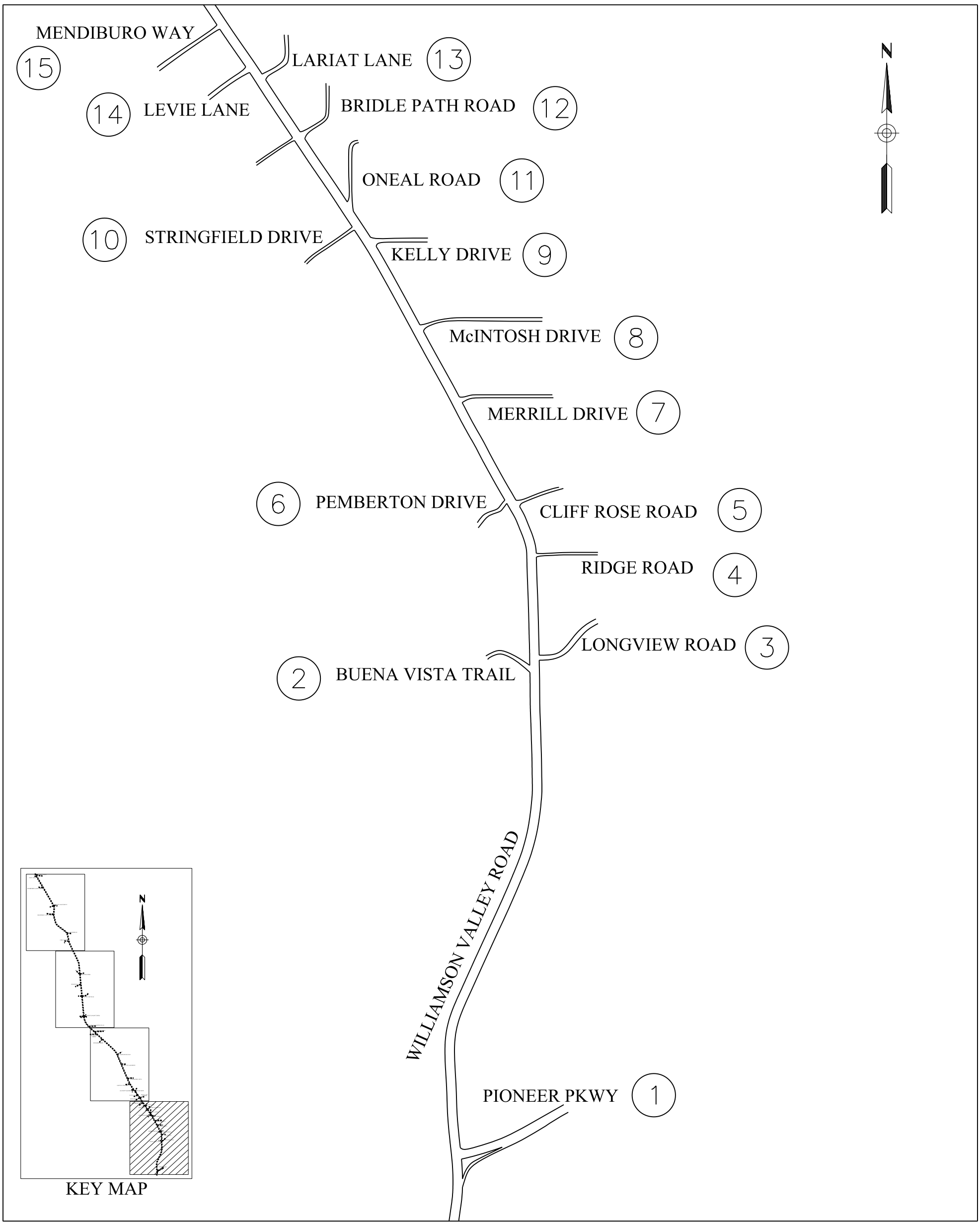

Location	AM Peak Hour Movements												PM Peak Hour Movements											
	Southbound			Westbound			Northbound			Eastbound			Southbound			Westbound			Northbound			Eastbound		
	Left	Thru	Right	Left	Thru	Right	Left	Thru	Right	Left	Thru	Right	Left	Thru	Right	Left	Thru	Right	Left	Thru	Right	Left	Thru	Right
1	272	583	--	270	--	131	--	171	190	--	--	--	167	263	--	145	--	231	--	354	182	--	--	--
2	--	835	1	--	--	--	3	311	--	1	--	11	--	427	1	--	--	--	13	574	--	2	--	2
3	1	771	--	42	--	6	--	299	15	--	--	--	1	406	--	22	--	3	--	574	30	--	--	--
4	1	753	--	4	--	1	--	306	4	--	--	--	1	398	--	1	--	1	--	598	4	--	--	--
5	1	735	--	5	--	1	--	278	4	--	--	--	1	394	--	3	--	1	--	586	6	--	--	--
6	--	735	1	--	--	--	7	278	--	2	--	19	--	394	3	--	--	--	13	574	--	5	--	8
7	3	722	--	15	--	2	--	290	6	--	--	--	1	385	--	7	--	2	--	538	11	--	--	--
8	2	717	--	20	--	1	--	281	7	--	--	--	1	376	--	5	--	4	--	500	7	--	--	--
9	1	680	--	17	--	1	--	278	7	--	--	--	1	366	--	6	--	2	--	491	11	--	--	--
10	--	693	2	--	--	--	3	269	--	1	--	5	--	347	1	--	--	--	1	496	--	1	--	3
11	1	705	--	8	--	3	--	238	1	--	--	--	1	330	--	3	--	4	--	478	9	--	--	--
12	1	704	1	4	1	1	1	225	2	2	1	6	1	335	2	1	1	1	1	466	8	1	1	1
13	1	681	--	4	--	1	--	235	2	--	--	--	1	350	--	4	--	1	--	466	3	--	--	--
14	--	669	2	--	--	--	6	259	--	3	--	21	--	336	1	--	--	--	11	451	--	2	--	14
15	--	657	1	--	--	--	1	262	--	1	--	14	--	323	1	--	--	--	4	445	--	2	--	6

3610 N. 44th Street
Suite 100
Phoenix, AZ 85018
602/955-7206
LEE ENGINEERING

Williamson Valley Road

Projected 2025 Count Data

Figure B 3.1

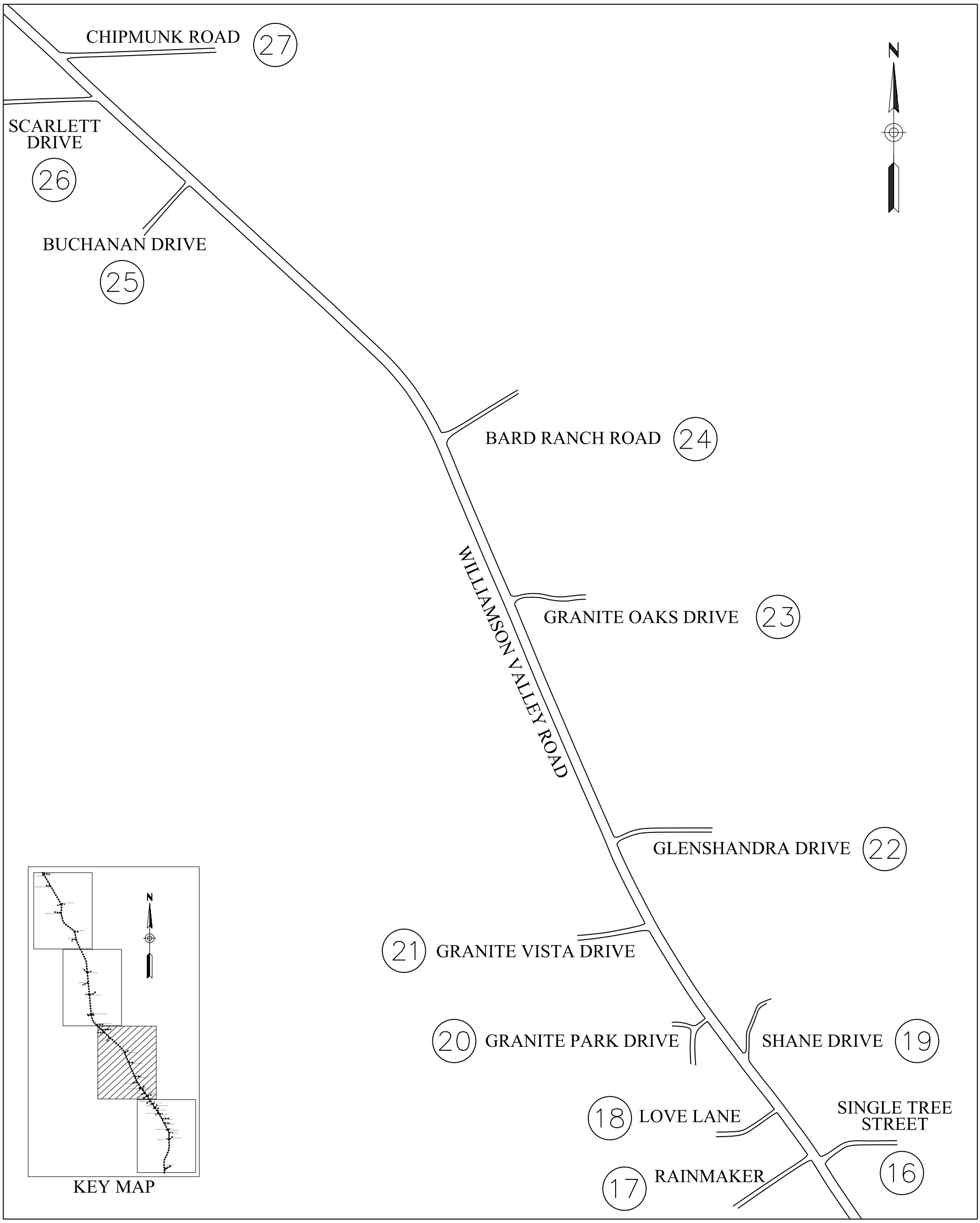

Location	AM Peak Hour Movements											
	Southbound			Westbound			Northbound			Eastbound		
	Left	Thru	Right	Left	Thru	Right	Left	Thru	Right	Left	Thru	Right
16	2	647	--	23	--	4	--	225	5	--	--	--
17	--	647	1	--	--	--	3	225	--	1	--	19
18	--	636	1	--	--	--	1	231	--	1	--	12
19	1	627	--	5	--	1	--	232	1	--	--	--
20	--	613	1	--	--	--	1	228	--	1	--	7
21	--	609	1	--	--	--	1	228	--	2	--	3
22	2	558	--	35	--	1	--	206	13	--	--	--
23	4	508	1	32	1	3	2	207	8	1	1	1
24	8	478	--	34	--	4	--	194	14	--	--	--
25	--	484	1	--	--	--	5	191	--	1	--	8
26	--	478	1	--	--	--	1	191	--	1	--	3
27	2	467	--	6	--	1	--	184	3	--	--	--

PM Peak Hour Movements											
Southbound			Westbound			Northbound			Eastbound		
Left	Thru	Right	Left	Thru	Right	Left	Thru	Right	Left	Thru	Right
3	304	--	9	--	2	--	467	19	--	--	--
--	304	4	--	--	--	12	467	--	2	--	10
--	304	3	--	--	--	7	463	--	1	--	8
1	295	--	4	--	1	--	459	4	--	--	--
--	289	1	--	--	--	4	457	--	1	--	6
--	287	2	--	--	--	6	449	--	1	--	1
3	255	--	11	--	4	--	418	32	--	--	--
3	239	1	20	1	4	2	394	22	1	1	1
5	228	--	20	--	8	--	357	28	--	--	--
--	226	1	--	--	--	8	354	--	1	--	5
--	223	1	--	--	--	8	357	--	1	--	5
5	228	--	1	--	1	--	363	4	--	--	--

3610 N. 44th Street
Suite 100
Phoenix, AZ 85018
602/955-7206
LEE ENGINEERING

Williamson Valley Road

Projected 2025 Count Data

Figure B 3.2

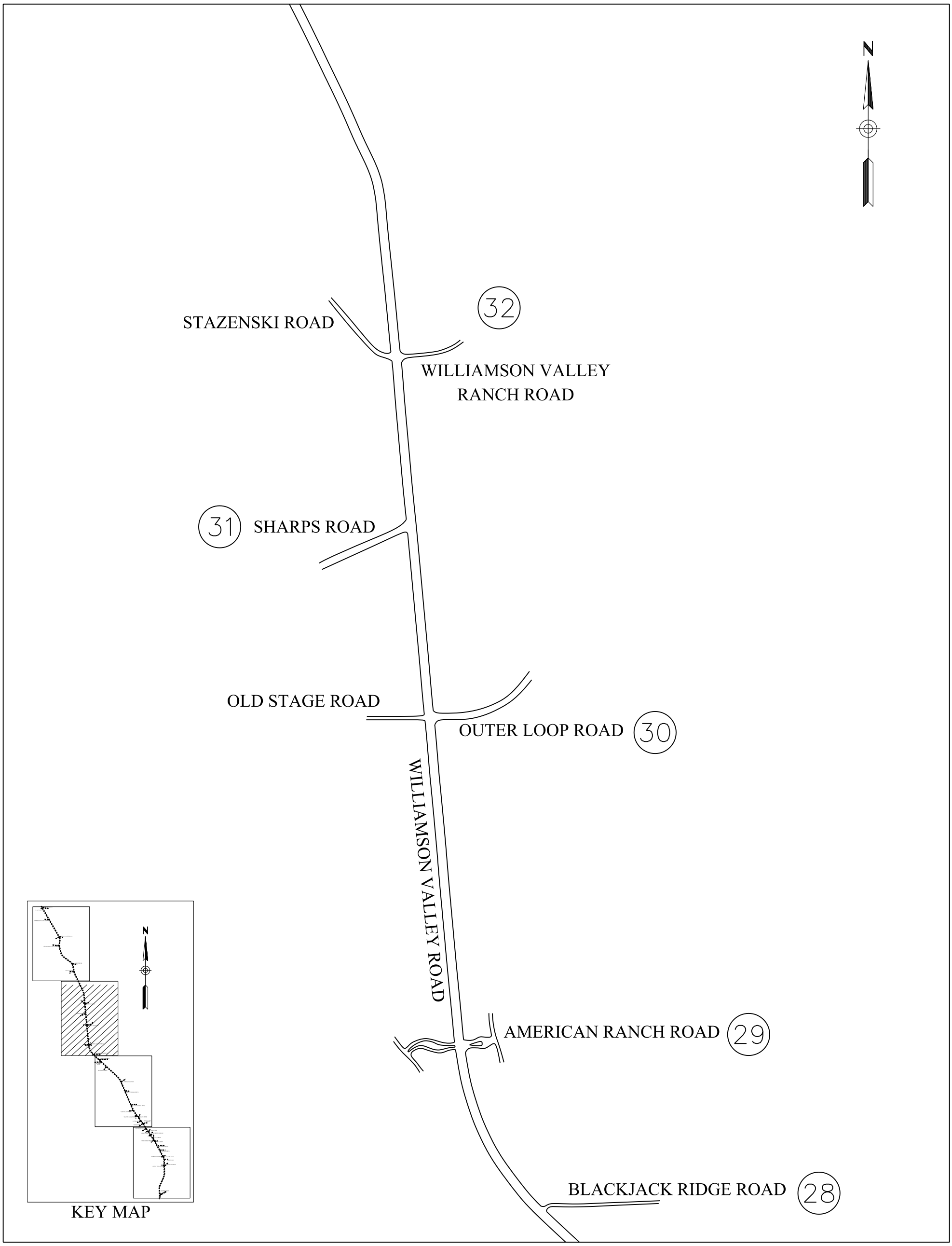

Location	AM Peak Hour Movements											
	Southbound			Westbound			Northbound			Eastbound		
	Left	Thru	Right	Left	Thru	Right	Left	Thru	Right	Left	Thru	Right
28	4	452	--	25	--	6	--	178	10	--	--	--
29	1	431	9	4	1	1	28	165	1	5	1	48
30	114	272	1	185	1	72	1	87	79	1	1	2
31	--	336	2	--	--	--	19	182	--	2	--	37
32	5	248	2	50	1	3	16	169	29	1	2	44

PM Peak Hour Movements											
Southbound			Westbound			Northbound			Eastbound		
Left	Thru	Right	Left	Thru	Right	Left	Thru	Right	Left	Thru	Right
3	218	--	18	--	5	--	344	20	--	--	--
1	179	7	2	1	1	30	311	4	8	1	28
78	120	1	69	2	96	2	201	135	1	1	1
--	191	2	--	--	--	22	282	--	1	--	17
2	153	1	38	1	3	28	219	40	13	1	20

3610 N. 44th Street
Suite 100
Phoenix, AZ 85018
602/955-7206
LEE ENGINEERING

Williamson Valley Road

Projected 2025 Count Data

Figure B 3.3

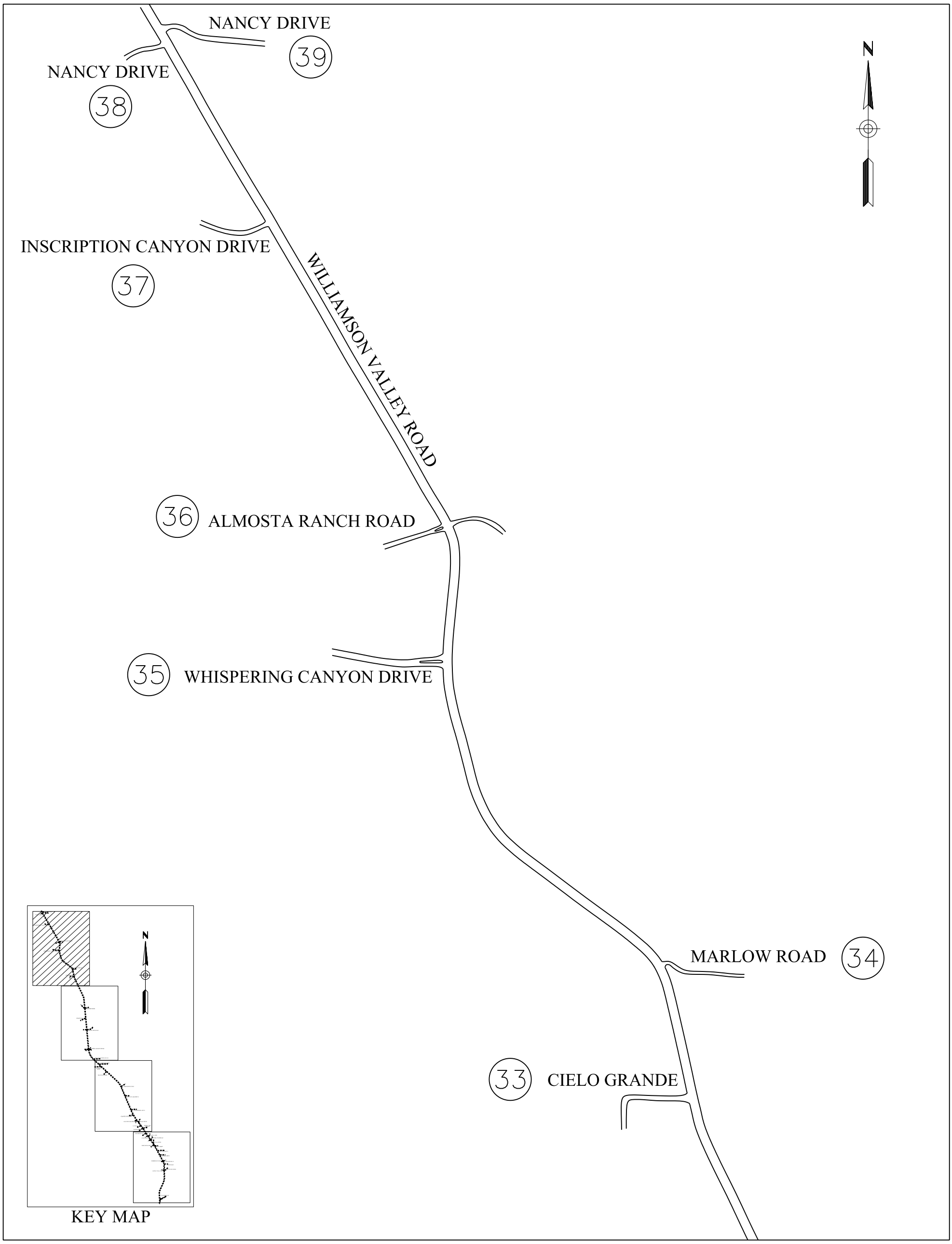

Location	AM Peak Hour Movements											
	Southbound			Westbound			Northbound			Eastbound		
	Left	Thru	Right	Left	Thru	Right	Left	Thru	Right	Left	Thru	Right
33	--	267	1	--	--	--	8	142	--	1	--	17
34	1	252	--	13	--	1	--	139	3	--	--	--
35	--	235	2	--	--	--	26	122	--	4	--	44
36	2	184	2	33	2	1	18	112	11	2	1	45
37	--	173	2	--	--	--	15	102	--	1	--	34
38	--	171	1	--	--	--	1	93	--	1	--	1
39	3	87	--	69	--	5	--	67	27	--	--	--

PM Peak Hour Movements											
Southbound			Westbound			Northbound			Eastbound		
Left	Thru	Right	Left	Thru	Right	Left	Thru	Right	Left	Thru	Right
--	166	2	--	--	--	13	250	--	1	--	7
1	161	--	4	--	1	--	238	11	--	--	--
--	158	2	--	--	--	32	226	--	2	--	28
3	143	2	15	1	3	37	159	23	3	1	25
--	125	1	--	--	--	24	148	--	3	--	22
--	120	1	--	--	--	2	137	--	1	--	1
3	114	--	34	--	3	--	76	57	--	--	--

3610 N. 44th Street
Suite 100
Phoenix, AZ 85018
602/955-7206
LEE ENGINEERING

Williamson Valley Road

Projected 2025 Count Data

Figure B 3.4

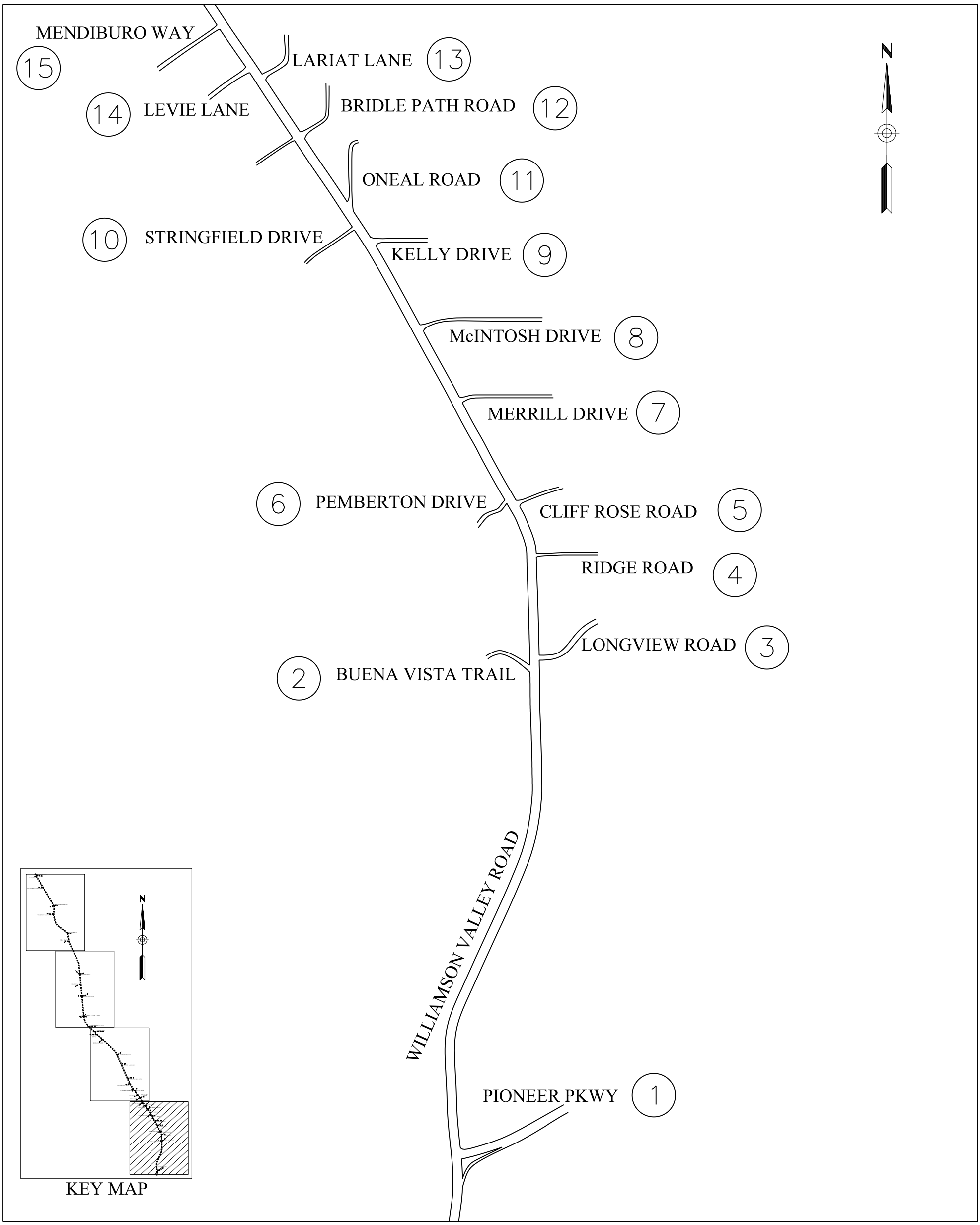

Location	AM Peak Hour Movements												PM Peak Hour Movements											
	Southbound			Westbound			Northbound			Eastbound			Southbound			Westbound			Northbound			Eastbound		
	Left	Thru	Right	Left	Thru	Right	Left	Thru	Right	Left	Thru	Right	Left	Thru	Right	Left	Thru	Right	Left	Thru	Right	Left	Thru	Right
1	366	785	--	363	--	176	--	230	256	--	--	--	225	354	--	195	--	311	--	476	245	--	--	--
2	--	1109	1	--	--	--	3	419	--	1	--	11	--	575	1	--	--	--	13	773	--	2	--	2
3	1	1038	--	42	--	6	--	402	15	--	--	--	1	546	--	22	--	3	--	773	30	--	--	--
4	1	1013	--	4	--	1	--	412	4	--	--	--	1	536	--	1	--	1	--	805	4	--	--	--
5	1	989	--	5	--	1	--	374	4	--	--	--	1	530	--	3	--	1	--	789	6	--	--	--
6	--	989	1	--	--	--	7	374	--	2	--	19	--	530	3	--	--	--	13	773	--	5	--	8
7	3	972	--	15	--	2	--	390	6	--	--	--	1	518	--	7	--	2	--	734	11	--	--	--
8	2	965	--	20	--	1	--	378	7	--	--	--	1	506	--	5	--	4	--	693	7	--	--	--
9	1	915	--	17	--	1	--	374	7	--	--	--	1	493	--	6	--	2	--	661	11	--	--	--
10	--	933	2	--	--	--	3	362	--	1	--	5	--	467	1	--	--	--	1	668	--	1	--	3
11	1	949	--	8	--	3	--	340	1	--	--	--	1	444	--	3	--	4	--	643	9	--	--	--
12	1	947	1	4	1	1	1	303	2	2	1	6	1	451	2	1	1	1	1	627	8	1	1	1
13	1	917	--	4	--	1	--	316	2	--	--	--	1	471	--	4	--	1	--	627	3	--	--	--
14	--	900	2	--	--	--	6	349	--	3	--	21	--	452	1	--	--	--	11	607	--	2	--	14
15	--	884	1	--	--	--	1	353	--	1	--	14	--	435	1	--	--	--	4	599	--	2	--	6

3610 N. 44th Street
Suite 100
Phoenix, AZ 85018
602/955-7206
LEE ENGINEERING

Williamson Valley Road

Projected 2040 Count Data

Figure B 4.1

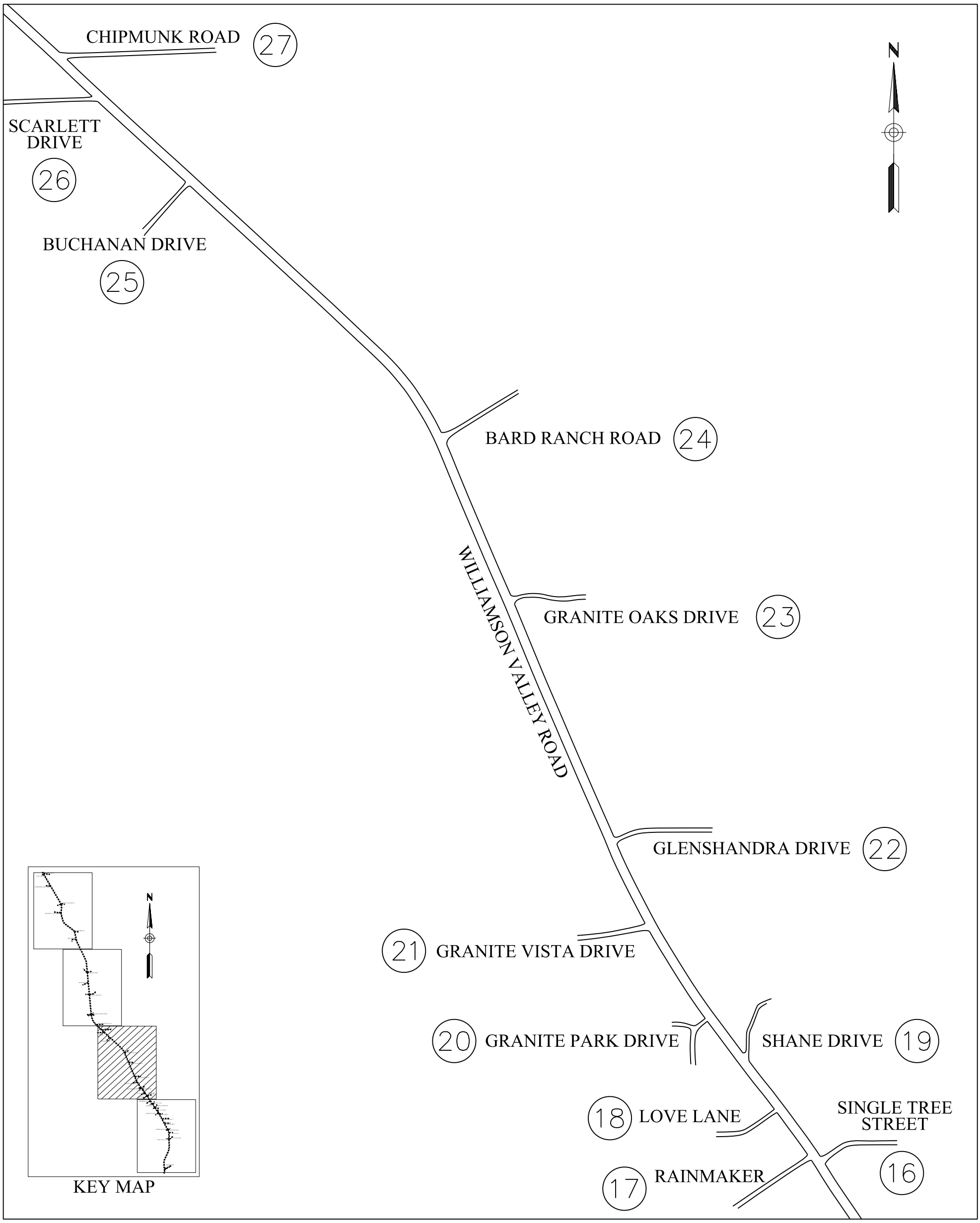

Location	AM Peak Hour Movements											
	Southbound			Westbound			Northbound			Eastbound		
	Left	Thru	Right	Left	Thru	Right	Left	Thru	Right	Left	Thru	Right
16	2	871	--	23	--	4	--	318	5	--	--	--
17	--	871	1	--	--	--	3	318	--	1	--	19
18	--	856	1	--	--	--	1	311	--	1	--	12
19	1	844	--	5	--	1	--	312	1	--	--	--
20	--	825	1	--	--	--	1	307	--	1	--	7
21	--	820	1	--	--	--	1	307	--	2	--	3
22	2	751	--	35	--	1	--	277	13	--	--	--
23	4	684	1	32	1	3	2	279	8	1	1	1
24	8	643	--	34	--	4	--	261	14	--	--	--
25	--	651	1	--	--	--	5	257	--	1	--	8
26	--	643	1	--	--	--	1	257	--	1	--	3
27	2	629	--	6	--	1	--	248	3	--	--	--

PM Peak Hour Movements											
Southbound			Westbound			Northbound			Eastbound		
Left	Thru	Right	Left	Thru	Right	Left	Thru	Right	Left	Thru	Right
3	409	--	9	--	2	--	609	19	--	--	--
--	409	4	--	--	--	12	629	--	2	--	10
--	409	3	--	--	--	7	623	--	1	--	8
1	397	--	4	--	1	--	618	4	--	--	--
--	389	1	--	--	--	4	615	--	1	--	6
--	386	2	--	--	--	6	604	--	1	--	1
3	343	--	11	--	4	--	563	32	--	--	--
3	322	1	20	1	4	2	530	22	1	1	1
5	307	--	20	--	8	--	480	28	--	--	--
--	304	1	--	--	--	8	476	--	1	--	5
--	300	1	--	--	--	8	480	--	1	--	5
5	307	--	1	--	1	--	489	4	--	--	--

3610 N. 44th Street
Suite 100
Phoenix, AZ 85018
602/955-7206
LEE ENGINEERING

Williamson Valley Road

Projected 2040 Count Data

Figure B 4.2

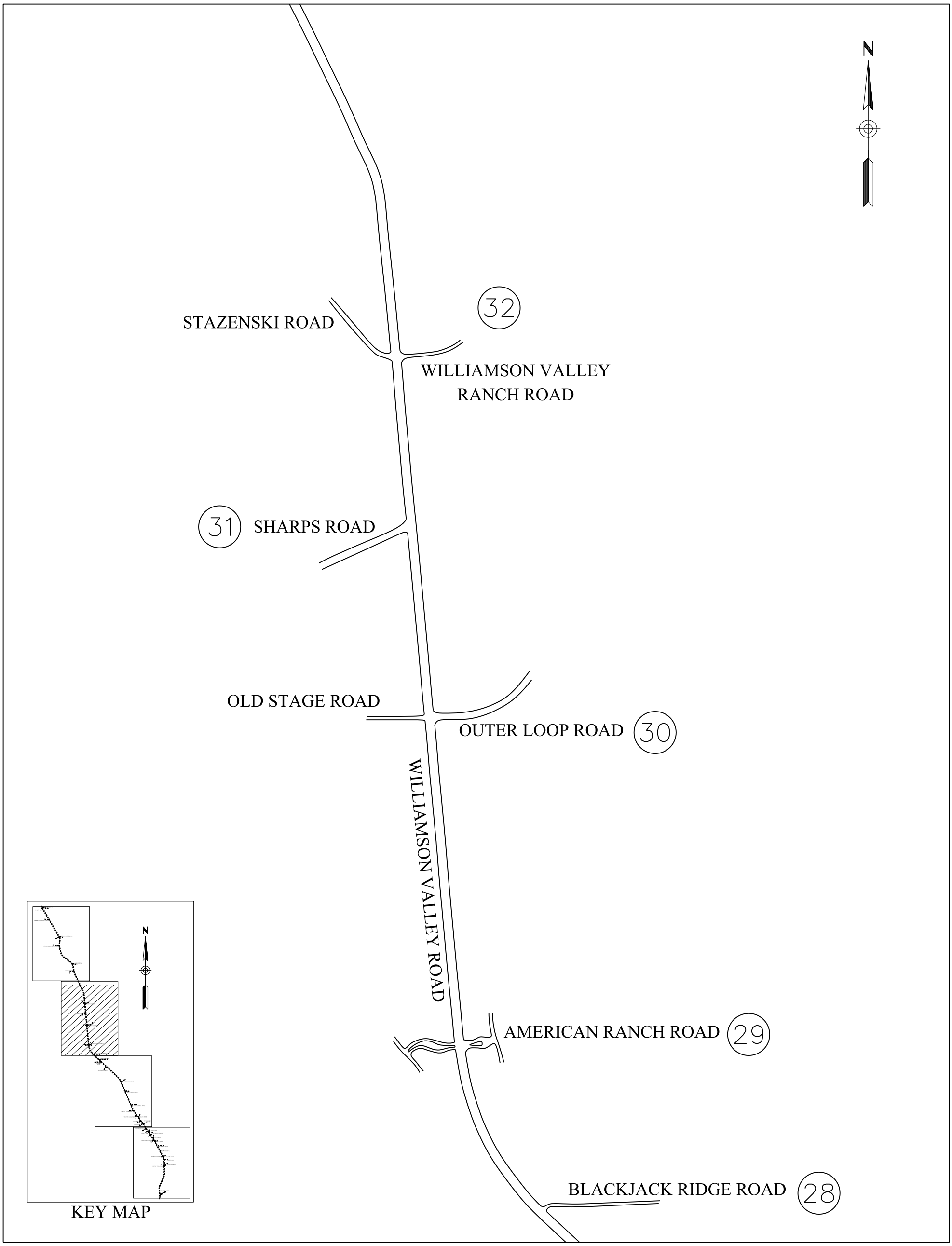

Location	AM Peak Hour Movements											
	Southbound			Westbound			Northbound			Eastbound		
	Left	Thru	Right	Left	Thru	Right	Left	Thru	Right	Left	Thru	Right
28	4	608	--	25	--	6	--	240	10	--	--	--
29	1	580	9	4	1	1	28	222	1	5	1	48
30	153	366	1	249	1	97	1	142	106	1	1	2
31	--	452	2	--	--	--	19	245	--	2	--	37
32	5	334	2	50	1	3	16	227	29	1	2	44

PM Peak Hour Movements											
Southbound			Westbound			Northbound			Eastbound		
Left	Thru	Right	Left	Thru	Right	Left	Thru	Right	Left	Thru	Right
3	293	--	18	--	5	--	463	20	--	--	--
1	241	7	2	1	1	30	419	4	8	1	28
105	162	1	93	3	129	2	271	182	1	1	1
--	257	2	--	--	--	22	380	--	1	--	17
2	206	1	38	1	3	28	295	40	13	1	20

3610 N. 44th Street
Suite 100
Phoenix, AZ 85018
602/955-7206
LEE ENGINEERING

Williamson Valley Road

Projected 2040 Count Data

Figure B 4.3

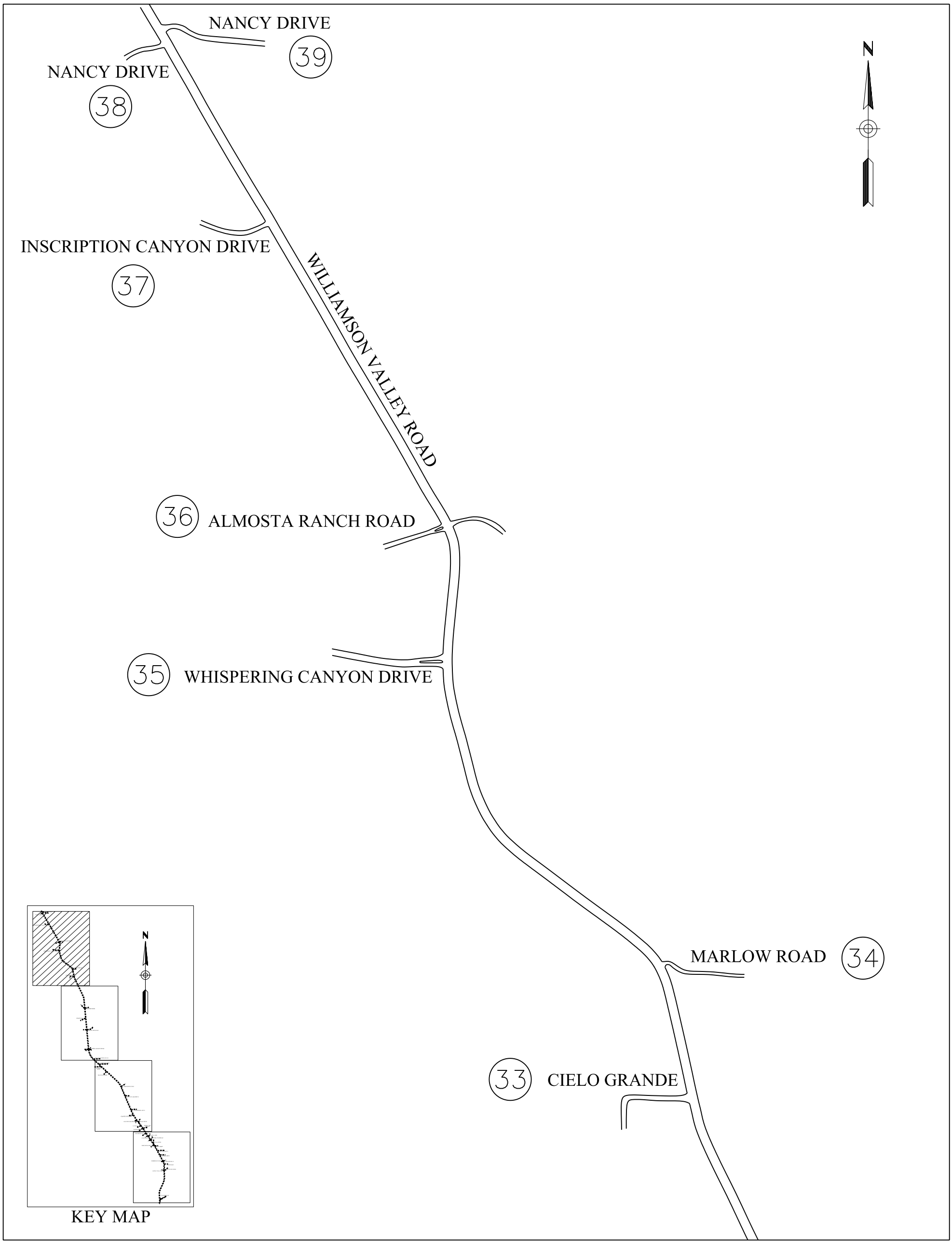

Location	AM Peak Hour Movements											
	Southbound			Westbound			Northbound			Eastbound		
	Left	Thru	Right	Left	Thru	Right	Left	Thru	Right	Left	Thru	Right
33	--	359	1	--	--	--	8	191	--	1	--	17
34	1	339	--	13	--	1	--	187	3	--	--	--
35	--	316	2	--	--	--	26	164	--	4	--	44
36	2	248	2	33	2	1	18	151	11	2	1	45
37	--	233	2	--	--	--	15	137	--	1	--	34
38	--	230	1	--	--	--	1	125	--	1	--	1
39	3	157	--	69	--	5	--	90	27	--	--	--

PM Peak Hour Movements											
Southbound			Westbound			Northbound			Eastbound		
Left	Thru	Right	Left	Thru	Right	Left	Thru	Right	Left	Thru	Right
--	223	2	--	--	--	13	336	--	1	--	7
1	217	--	4	--	1	--	320	11	--	--	--
--	213	2	--	--	--	32	304	--	2	--	28
3	192	2	15	1	3	37	214	23	3	1	25
--	168	1	--	--	--	24	199	--	3	--	22
--	177	1	--	--	--	2	184	--	1	--	1
3	153	--	34	--	3	--	102	57	--	--	--

3610 N. 44th Street
Suite 100
Phoenix, AZ 85018
602/955-7206
LEE ENGINEERING

Williamson Valley Road

Projected 2040 Count Data

Figure B 4.4

APPENDIX C – AASHTO INTERSECTION SIGHT DISTANCE CRITERIA

This appendix contains excerpts from the 2011 AASHTO "A Policy on Geometric Design of Highways and Streets"

9.5 INTERSECTION SIGHT DISTANCE

Metric	U.S. Customary
$ISD = 0.278\ V_{major}\ t_g$	$ISD = 1.47\ V_{major}\ t_g$
where:	where:
ISD = intersection sight distance (length of the leg of sight triangle along the major road) (m)	ISD = intersection sight distance (length of the leg of sight triangle along the major road) (ft)
V_{major} = design speed of major road (km/h)	V_{major} = design speed of major road (mph)
t_g = time gap for minor road vehicle to enter the major road (s)	t_g = time gap for minor road vehicle to enter the major road (s)

For example, a passenger car turning left onto a two-lane major road should be provided sight distance equivalent to a time gap of 7.5 s in major-road traffic. If the design speed of the major road is 100 km/h [60 mph], this corresponds to a sight distance of 0.278(100)(7.5) = 208.5 or 210 m [1.47(60)(7.5) = 661.5 or 665 ft], rounded for design.

Table 9-5 Time Gap for Case B1, Left Turn from Stop

Design Vehicle	Time Gap (t_g)(s) at Design Speed of Major Road
Passenger car	7.5
Single-unit truck	9.5
Combination truck	11.5

Table 9-7 Time Gap for Case B2—Right Turn from Stop and Case B3—Crossing Maneuver

Design Vehicle	Time Gap (t_g)(s) at Design Speed of Major Road
Passenger car	6.5
Single-unit truck	8.5
Combination truck	10.5

Note: Time gaps are for a stopped vehicle to turn right onto or to cross a two-lane highway with no median and with grades of 3 percent or less. The table values should be adjusted as follows:

For multilane highways—For crossing a major road with more than two lanes, add 0.5 s for passenger cars and 0.7 s for trucks for each additional lane to be crossed and for narrow medians that cannot store the design vehicle.

For minor road approach grades—If the approach grade is an upgrade that exceeds 3 percent, add 0.1 s for each percent grade.

Grade Adjustment Factors

U.S. Customary														
	Design Speed (mph)													
Approach Grade (%)	**15**	**20**	**25**	**30**	**35**	**40**	**45**	**50**	**55**	**60**	**65**	**70**	**75**	**80**
−6	1.1	1.1	1.1	1.1	1.1	1.1	1.1	1.2	1.2	1.2	1.2	1.2	1.2	1.2
−5	1.0	1.0	1.1	1.1	1.1	1.1	1.1	1.1	1.1	1.1	1.2	1.2	1.2	1.2
−4	1.0	1.0	1.0	1.1	1.1	1.1	1.1	1.1	1.1	1.1	1.1	1.1	1.1	1.1
−3 to +3	1.0	1.0	1.0	1.0	1.0	1.0	1.0	1.0	1.0	1.0	1.0	1.0	1.0	1.0
+4	1.0	1.0	1.0	1.0	0.9	0.9	0.9	0.9	0.9	0.9	0.9	0.9	0.9	0.9
+5	1.0	1.0	1.0	0.9	0.9	0.9	0.9	0.9	0.9	0.9	0.9	0.9	0.9	0.9
+6	1.0	1.0	0.9	0.9	0.9	0.9	0.9	0.9	0.9	0.9	0.9	0.9	0.9	0.9
Note: Based on ratio of stopping sight distance on specified approach grade to stopping sight distance on level terrain.														

APPENDIX D – SIGHT DISTANCE CONCERNS AND LOCATIONS

Appendix C – Sight Visibility Concerns and Locations

1) Buena Vista Trail – Looking Southbound

Williamson Valley Road Looking South from Buena Vista Trail (Vertical Curvature)

2) Ridge Road – Looking Northbound

Williamson Valley Road Looking North from Buena Vista Trail (Vegetation)

3) Pemberton Drive – Looking Southbound

Williamson Valley Road Looking South from Pemberton Drive (Vertical/Horizontal Curvature, Vegetation, Embankment)

4) Kelly Drive – Looking Northbound

Williamson Valley Road Looking North from Kelly Drive (Vertical Curvature)

5) Stringfield Drive – Looking Northbound

Williamson Valley Road Looking North from Stringfield Drive (Vertical Curvature)

6) Granite Park Drive – Looking Northbound

Williamson Valley Road Looking North from Granite Park Drive (Vertical Curvature)

7) Dome Road – Looking South

Williamson Valley Road Looking South from Dome Road (Vertical Curvature, Embankment)

APPENDIX E – MUTCD TRAFFIC SIGNAL WARRANT CRITERIA

CHAPTER 4C. TRAFFIC CONTROL SIGNAL NEEDS STUDIES

Section 4C.01 Studies and Factors for Justifying Traffic Control Signals

Standard:

01 **An engineering study of traffic conditions, pedestrian characteristics, and physical characteristics of the location shall be performed to determine whether installation of a traffic control signal is justified at a particular location.**

02 **The investigation of the need for a traffic control signal shall include an analysis of factors related to the existing operation and safety at the study location and the potential to improve these conditions, and the applicable factors contained in the following traffic signal warrants:**

Warrant 1, Eight-Hour Vehicular Volume
Warrant 2, Four-Hour Vehicular Volume
Warrant 3, Peak Hour
Warrant 4, Pedestrian Volume
Warrant 5, School Crossing
Warrant 6, Coordinated Signal System
Warrant 7, Crash Experience
Warrant 8, Roadway Network
Warrant 9, Intersection Near a Grade Crossing

03 **The satisfaction of a traffic signal warrant or warrants shall not in itself require the installation of a traffic control signal.**

Support:

04 Sections 8C.09 and 8C.10 contain information regarding the use of traffic control signals instead of gates and/or flashing-light signals at highway-rail grade crossings and highway-light rail transit grade crossings, respectively.

Guidance:

05 *A traffic control signal should not be installed unless one or more of the factors described in this Chapter are met.*

06 *A traffic control signal should not be installed unless an engineering study indicates that installing a traffic control signal will improve the overall safety and/or operation of the intersection.*

07 *A traffic control signal should not be installed if it will seriously disrupt progressive traffic flow.*

08 *The study should consider the effects of the right-turn vehicles from the minor-street approaches. Engineering judgment should be used to determine what, if any, portion of the right-turn traffic is subtracted from the minor-street traffic count when evaluating the count against the signal warrants listed in Paragraph 2.*

09 *Engineering judgment should also be used in applying various traffic signal warrants to cases where approaches consist of one lane plus one left-turn or right-turn lane. The site-specific traffic characteristics should dictate whether an approach is considered as one lane or two lanes. For example, for an approach with one lane for through and right-turning traffic plus a left-turn lane, if engineering judgment indicates that it should be considered a one-lane approach because the traffic using the left-turn lane is minor, the total traffic volume approaching the intersection should be applied against the signal warrants as a one-lane approach. The approach should be considered two lanes if approximately half of the traffic on the approach turns left and the left-turn lane is of sufficient length to accommodate all left-turn vehicles.*

10 *Similar engineering judgment and rationale should be applied to a street approach with one through/left-turn lane plus a right-turn lane. In this case, the degree of conflict of minor-street right-turn traffic with traffic on the major street should be considered. Thus, right-turn traffic should not be included in the minor-street volume if the movement enters the major street with minimal conflict. The approach should be evaluated as a one-lane approach with only the traffic volume in the through/left-turn lane considered.*

11 *At a location that is under development or construction and where it is not possible to obtain a traffic count that would represent future traffic conditions, hourly volumes should be estimated as part of an engineering study for comparison with traffic signal warrants. Except for locations where the engineering study uses the satisfaction of Warrant 8 to justify a signal, a traffic control signal installed under projected conditions should have an engineering study done within 1 year of putting the signal into stop-and-go operation to determine if the signal is justified. If not justified, the signal should be taken out of stop-and-go operation or removed.*

12 *For signal warrant analysis, a location with a wide median, even if the median width is greater than 30 feet, should be considered as one intersection.*

Option:

13 At an intersection with a high volume of left-turn traffic from the major street, the signal warrant analysis may be performed in a manner that considers the higher of the major-street left-turn volumes as the "minor-street" volume and the corresponding single direction of opposing traffic on the major street as the "major-street" volume.

14 For signal warrants requiring conditions to be present for a certain number of hours in order to be satisfied, any four sequential 15-minute periods may be considered as 1 hour if the separate 1-hour periods used in the warrant analysis do not overlap each other and both the major-street volume and the minor-street volume are for the same specific one-hour periods.

15 For signal warrant analysis, bicyclists may be counted as either vehicles or pedestrians.

Support:

16 When performing a signal warrant analysis, bicyclists riding in the street with other vehicular traffic are usually counted as vehicles and bicyclists who are clearly using pedestrian facilities are usually counted as pedestrians.

Option:

17 Engineering study data may include the following:

A. The number of vehicles entering the intersection in each hour from each approach during 12 hours of an average day. It is desirable that the hours selected contain the greatest percentage of the 24-hour traffic volume.
B. Vehicular volumes for each traffic movement from each approach, classified by vehicle type (heavy trucks, passenger cars and light trucks, public-transit vehicles, and, in some locations, bicycles), during each 15-minute period of the 2 hours in the morning and 2 hours in the afternoon during which total traffic entering the intersection is greatest.
C. Pedestrian volume counts on each crosswalk during the same periods as the vehicular counts in Item B and during hours of highest pedestrian volume. Where young, elderly, and/or persons with physical or visual disabilities need special consideration, the pedestrians and their crossing times may be classified by general observation.
D. Information about nearby facilities and activity centers that serve the young, elderly, and/or persons with disabilities, including requests from persons with disabilities for accessible crossing improvements at the location under study. These persons might not be adequately reflected in the pedestrian volume count if the absence of a signal restrains their mobility.
E. The posted or statutory speed limit or the 85th-percentile speed on the uncontrolled approaches to the location.
F. A condition diagram showing details of the physical layout, including such features as intersection geometrics, channelization, grades, sight-distance restrictions, transit stops and routes, parking conditions, pavement markings, roadway lighting, driveways, nearby railroad crossings, distance to nearest traffic control signals, utility poles and fixtures, and adjacent land use.
G. A collision diagram showing crash experience by type, location, direction of movement, severity, weather, time of day, date, and day of week for at least 1 year.

18 The following data, which are desirable for a more precise understanding of the operation of the intersection, may be obtained during the periods described in Item B of Paragraph 17:

A. Vehicle-hours of stopped time delay determined separately for each approach.
B. The number and distribution of acceptable gaps in vehicular traffic on the major street for entrance from the minor street.
C. The posted or statutory speed limit or the 85th-percentile speed on controlled approaches at a point near to the intersection but unaffected by the control.
D. Pedestrian delay time for at least two 30-minute peak pedestrian delay periods of an average weekday or like periods of a Saturday or Sunday.
E. Queue length on stop-controlled approaches.

Section 4C.02 Warrant 1, Eight-Hour Vehicular Volume

Support:

01 The Minimum Vehicular Volume, Condition A, is intended for application at locations where a large volume of intersecting traffic is the principal reason to consider installing a traffic control signal.

02 The Interruption of Continuous Traffic, Condition B, is intended for application at locations where Condition A is not satisfied and where the traffic volume on a major street is so heavy that traffic on a minor intersecting street suffers excessive delay or conflict in entering or crossing the major street.

03 It is intended that Warrant 1 be treated as a single warrant. If Condition A is satisfied, then Warrant 1 is satisfied and analyses of Condition B and the combination of Conditions A and B are not needed. Similarly, if Condition B is satisfied, then Warrant 1 is satisfied and an analysis of the combination of Conditions A and B is not needed.

Standard:

04 **The need for a traffic control signal shall be considered if an engineering study finds that one of the following conditions exist for each of any 8 hours of an average day:**

A. The vehicles per hour given in both of the 100 percent columns of Condition A in Table 4C-1 exist on the major-street and the higher-volume minor-street approaches, respectively, to the intersection; or

B. The vehicles per hour given in both of the 100 percent columns of Condition B in Table 4C-1 exist on the major-street and the higher-volume minor-street approaches, respectively, to the intersection.

In applying each condition the major-street and minor-street volumes shall be for the same 8 hours. On the minor street, the higher volume shall not be required to be on the same approach during each of these 8 hours.

Option:

05 If the posted or statutory speed limit or the 85th-percentile speed on the major street exceeds 40 mph, or if the intersection lies within the built-up area of an isolated community having a population of less than 10,000, the traffic volumes in the 70 percent columns in Table 4C-1 may be used in place of the 100 percent columns.

Guidance:

06 *The combination of Conditions A and B is intended for application at locations where Condition A is not satisfied and Condition B is not satisfied and should be applied only after an adequate trial of other alternatives that could cause less delay and inconvenience to traffic has failed to solve the traffic problems.*

Standard:

07 **The need for a traffic control signal shall be considered if an engineering study finds that both of the following conditions exist for each of any 8 hours of an average day:**

A. The vehicles per hour given in both of the 80 percent columns of Condition A in Table 4C-1 exist on the major-street and the higher-volume minor-street approaches, respectively, to the intersection; and

B. The vehicles per hour given in both of the 80 percent columns of Condition B in Table 4C-1 exist on the major-street and the higher-volume minor-street approaches, respectively, to the intersection.

These major-street and minor-street volumes shall be for the same 8 hours for each condition; however, the 8 hours satisfied in Condition A shall not be required to be the same 8 hours satisfied in Condition B. On the minor street, the higher volume shall not be required to be on the same approach during each of the 8 hours.

Table 4C-1. Warrant 1, Eight-Hour Vehicular Volume

Condition A—Minimum Vehicular Volume

Number of lanes for moving traffic on each approach		Vehicles per hour on major street (total of both approaches)				Vehicles per hour on higher-volume minor-street approach (one direction only)			
Major Street	Minor Street	100%[a]	80%[b]	70%[c]	56%[d]	100%[a]	80%[b]	70%[c]	56%[d]
1	1	500	400	350	280	150	120	105	84
2 or more	1	600	480	420	336	150	120	105	84
2 or more	2 or more	600	480	420	336	200	160	140	112
1	2 or more	500	400	350	280	200	160	140	112

Condition B—Interruption of Continuous Traffic

Number of lanes for moving traffic on each approach		Vehicles per hour on major street (total of both approaches)				Vehicles per hour on higher-volume minor-street approach (one direction only)			
Major Street	Minor Street	100%[a]	80%[b]	70%[c]	56%[d]	100%[a]	80%[b]	70%[c]	56%[d]
1	1	750	600	525	420	75	60	53	42
2 or more	1	900	720	630	504	75	60	53	42
2 or more	2 or more	900	720	630	504	100	80	70	56
1	2 or more	750	600	525	420	100	80	70	56

[a] Basic minimum hourly volume
[b] Used for combination of Conditions A and B after adequate trial of other remedial measures
[c] May be used when the major-street speed exceeds 40 mph or in an isolated community with a population of less than 10,000
[d] May be used for combination of Conditions A and B after adequate trial of other remedial measures when the major-street speed exceeds 40 mph or in an isolated community with a population of less than 10,000

Option:

08 If the posted or statutory speed limit or the 85th-percentile speed on the major street exceeds 40 mph, or if the intersection lies within the built-up area of an isolated community having a population of less than 10,000, the traffic volumes in the 56 percent columns in Table 4C-1 may be used in place of the 80 percent columns.

Section 4C.03 Warrant 2, Four-Hour Vehicular Volume

Support:

01 The Four-Hour Vehicular Volume signal warrant conditions are intended to be applied where the volume of intersecting traffic is the principal reason to consider installing a traffic control signal.

Standard:

02 **The need for a traffic control signal shall be considered if an engineering study finds that, for each of any 4 hours of an average day, the plotted points representing the vehicles per hour on the major street (total of both approaches) and the corresponding vehicles per hour on the higher-volume minor-street approach (one direction only) all fall above the applicable curve in Figure 4C-1 for the existing combination of approach lanes. On the minor street, the higher volume shall not be required to be on the same approach during each of these 4 hours.**

Option:

03 If the posted or statutory speed limit or the 85th-percentile speed on the major street exceeds 40 mph, or if the intersection lies within the built-up area of an isolated community having a population of less than 10,000, Figure 4C-2 may be used in place of Figure 4C-1.

Section 4C.04 Warrant 3, Peak Hour

Support:

01 The Peak Hour signal warrant is intended for use at a location where traffic conditions are such that for a minimum of 1 hour of an average day, the minor-street traffic suffers undue delay when entering or crossing the major street.

Standard:

02 **This signal warrant shall be applied only in unusual cases, such as office complexes, manufacturing plants, industrial complexes, or high-occupancy vehicle facilities that attract or discharge large numbers of vehicles over a short time.**

03 **The need for a traffic control signal shall be considered if an engineering study finds that the criteria in either of the following two categories are met:**

- **A. If all three of the following conditions exist for the same 1 hour (any four consecutive 15-minute periods) of an average day:**
  1. **The total stopped time delay experienced by the traffic on one minor-street approach (one direction only) controlled by a STOP sign equals or exceeds: 4 vehicle-hours for a one-lane approach or 5 vehicle-hours for a two-lane approach; and**
  2. **The volume on the same minor-street approach (one direction only) equals or exceeds 100 vehicles per hour for one moving lane of traffic or 150 vehicles per hour for two moving lanes; and**
  3. **The total entering volume serviced during the hour equals or exceeds 650 vehicles per hour for intersections with three approaches or 800 vehicles per hour for intersections with four or more approaches.**
- **B. The plotted point representing the vehicles per hour on the major street (total of both approaches) and the corresponding vehicles per hour on the higher-volume minor-street approach (one direction only) for 1 hour (any four consecutive 15-minute periods) of an average day falls above the applicable curve in Figure 4C-3 for the existing combination of approach lanes.**

Option:

04 If the posted or statutory speed limit or the 85th-percentile speed on the major street exceeds 40 mph, or if the intersection lies within the built-up area of an isolated community having a population of less than 10,000, Figure 4C-4 may be used in place of Figure 4C-3 to evaluate the criteria in the second category of the Standard.

05 If this warrant is the only warrant met and a traffic control signal is justified by an engineering study, the traffic control signal may be operated in the flashing mode during the hours that the volume criteria of this warrant are not met.

Guidance:

06 *If this warrant is the only warrant met and a traffic control signal is justified by an engineering study, the traffic control signal should be traffic-actuated.*

Figure 4C-1. Warrant 2, Four-Hour Vehicular Volume

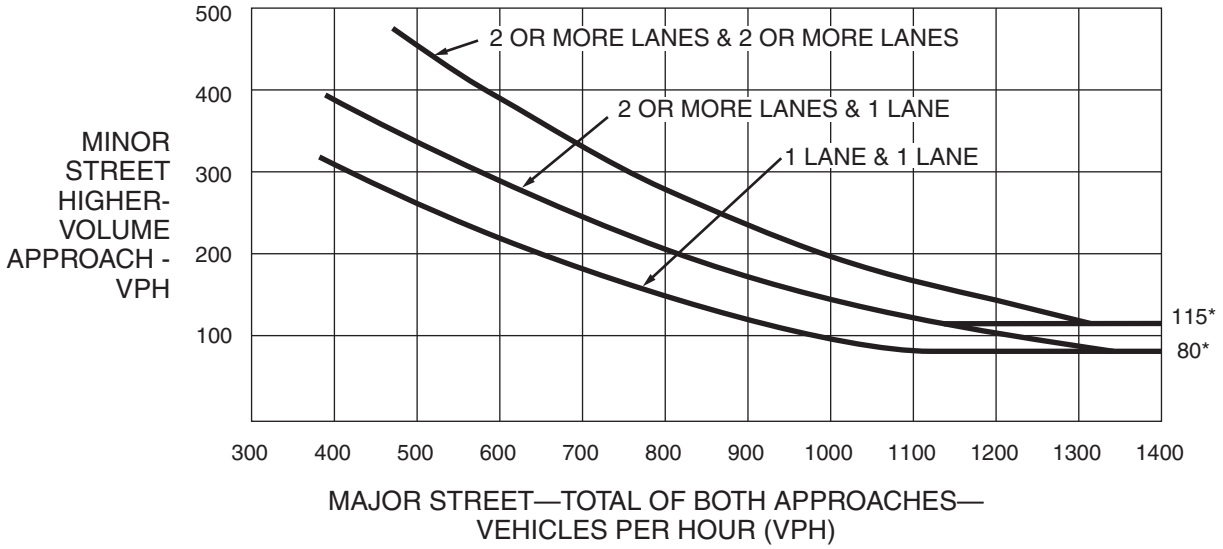

*Note: 115 vph applies as the lower threshold volume for a minor-street approach with two or more lanes and 80 vph applies as the lower threshold volume for a minor-street approach with one lane.

Figure 4C-2. Warrant 2, Four-Hour Vehicular Volume (70% Factor)

(COMMUNITY LESS THAN 10,000 POPULATION OR ABOVE 40 MPH ON MAJOR STREET)

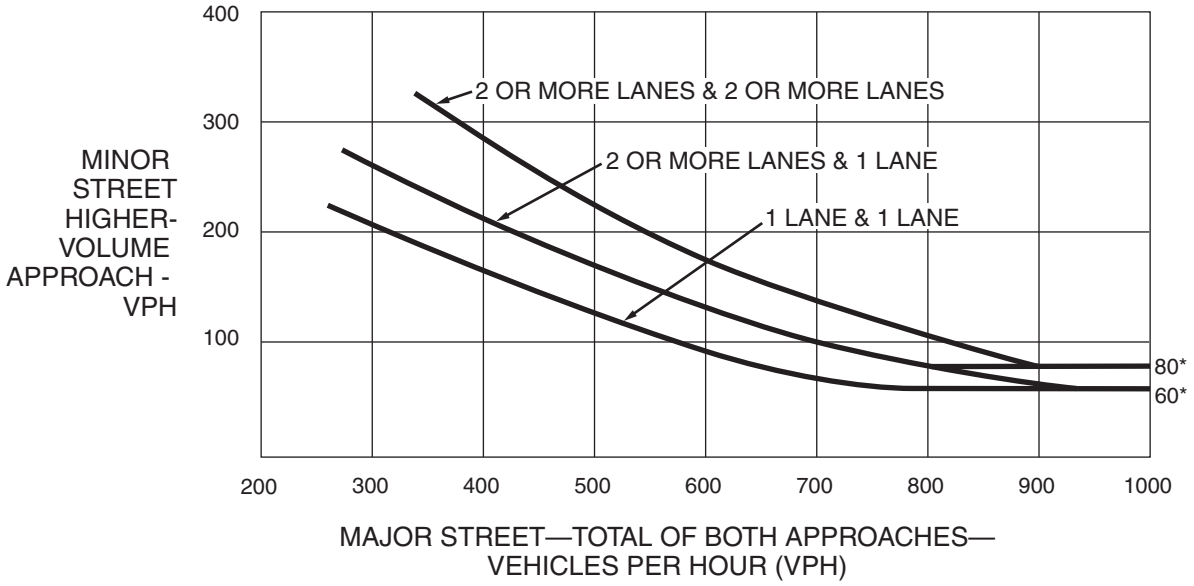

*Note: 80 vph applies as the lower threshold volume for a minor-street approach with two or more lanes and 60 vph applies as the lower threshold volume for a minor-street approach with one lane.

Figure 4C-3. Warrant 3, Peak Hour

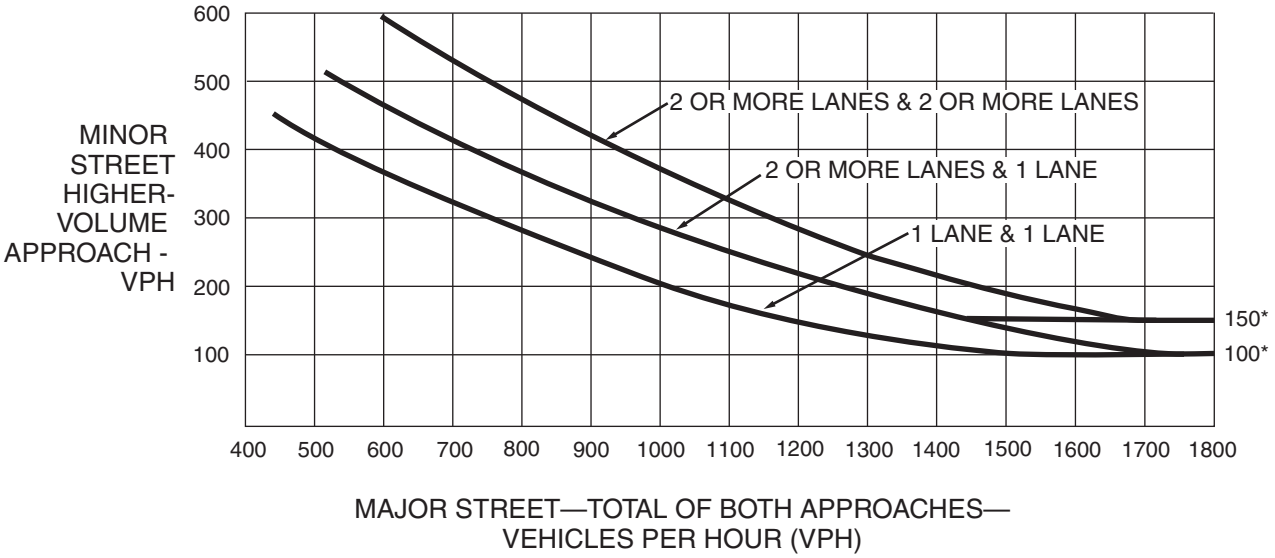

*Note: 150 vph applies as the lower threshold volume for a minor-street approach with two or more lanes and 100 vph applies as the lower threshold volume for a minor-street approach with one lane.

Figure 4C-4. Warrant 3, Peak Hour (70% Factor)

(COMMUNITY LESS THAN 10,000 POPULATION OR ABOVE 40 MPH ON MAJOR STREET)

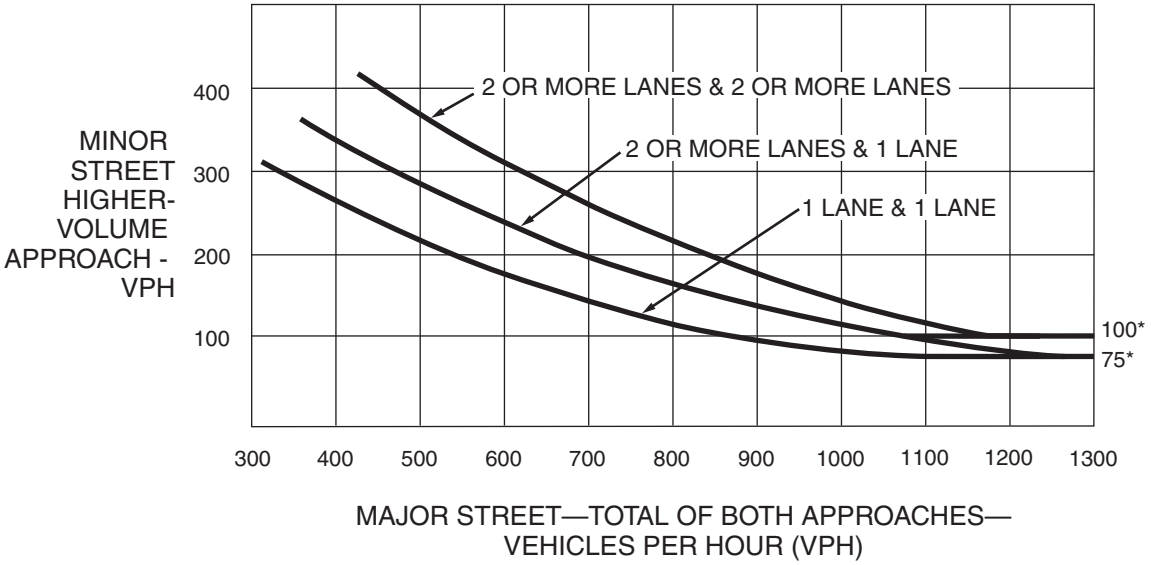

*Note: 100 vph applies as the lower threshold volume for a minor-street approach with two or more lanes and 75 vph applies as the lower threshold volume for a minor-street approach with one lane.

Section 4C.05 Warrant 4, Pedestrian Volume

Support:

01 The Pedestrian Volume signal warrant is intended for application where the traffic volume on a major street is so heavy that pedestrians experience excessive delay in crossing the major street.

Standard:

02 **The need for a traffic control signal at an intersection or midblock crossing shall be considered if an engineering study finds that one of the following criteria is met:**

A. For each of any 4 hours of an average day, the plotted points representing the vehicles per hour on the major street (total of both approaches) and the corresponding pedestrians per hour crossing the major street (total of all crossings) all fall above the curve in Figure 4C-5; or

B. For 1 hour (any four consecutive 15-minute periods) of an average day, the plotted point representing the vehicles per hour on the major street (total of both approaches) and the corresponding pedestrians per hour crossing the major street (total of all crossings) falls above the curve in Figure 4C-7.

Option:

03 If the posted or statutory speed limit or the 85th-percentile speed on the major street exceeds 35 mph, or if the intersection lies within the built-up area of an isolated community having a population of less than 10,000, Figure 4C-6 may be used in place of Figure 4C-5 to evaluate Criterion A in Paragraph 2, and Figure 4C-8 may be used in place of Figure 4C-7 to evaluate Criterion B in Paragraph 2.

Standard:

04 **The Pedestrian Volume signal warrant shall not be applied at locations where the distance to the nearest traffic control signal or STOP sign controlling the street that pedestrians desire to cross is less than 300 feet, unless the proposed traffic control signal will not restrict the progressive movement of traffic.**

05 **If this warrant is met and a traffic control signal is justified by an engineering study, the traffic control signal shall be equipped with pedestrian signal heads complying with the provisions set forth in Chapter 4E.**

Guidance:

06 *If this warrant is met and a traffic control signal is justified by an engineering study, then:*

A. If it is installed at an intersection or major driveway location, the traffic control signal should also control the minor-street or driveway traffic, should be traffic-actuated, and should include pedestrian detection.

B. If it is installed at a non-intersection crossing, the traffic control signal should be installed at least 100 feet from side streets or driveways that are controlled by STOP or YIELD signs, and should be pedestrian-actuated. If the traffic control signal is installed at a non-intersection crossing, at least one of the signal faces should be over the traveled way for each approach, parking and other sight obstructions should be prohibited for at least 100 feet in advance of and at least 20 feet beyond the crosswalk or site accommodations should be made through curb extensions or other techniques to provide adequate sight distance, and the installation should include suitable standard signs and pavement markings.

C. Furthermore, if it is installed within a signal system, the traffic control signal should be coordinated.

Option:

07 The criterion for the pedestrian volume crossing the major street may be reduced as much as 50 percent if the 15th-percentile crossing speed of pedestrians is less than 3.5 feet per second.

08 A traffic control signal may not be needed at the study location if adjacent coordinated traffic control signals consistently provide gaps of adequate length for pedestrians to cross the street.

Section 4C.06 Warrant 5, School Crossing

Support:

01 The School Crossing signal warrant is intended for application where the fact that schoolchildren cross the major street is the principal reason to consider installing a traffic control signal. For the purposes of this warrant, the word "schoolchildren" includes elementary through high school students.

Standard:

02 **The need for a traffic control signal shall be considered when an engineering study of the frequency and adequacy of gaps in the vehicular traffic stream as related to the number and size of groups of schoolchildren at an established school crossing across the major street shows that the number of adequate gaps in the traffic stream during the period when the schoolchildren are using the crossing is less than the number of minutes in the same period (see Section 7A.03) and there are a minimum of 20 schoolchildren during the highest crossing hour.**

Figure 4C-5. Warrant 4, Pedestrian Four-Hour Volume

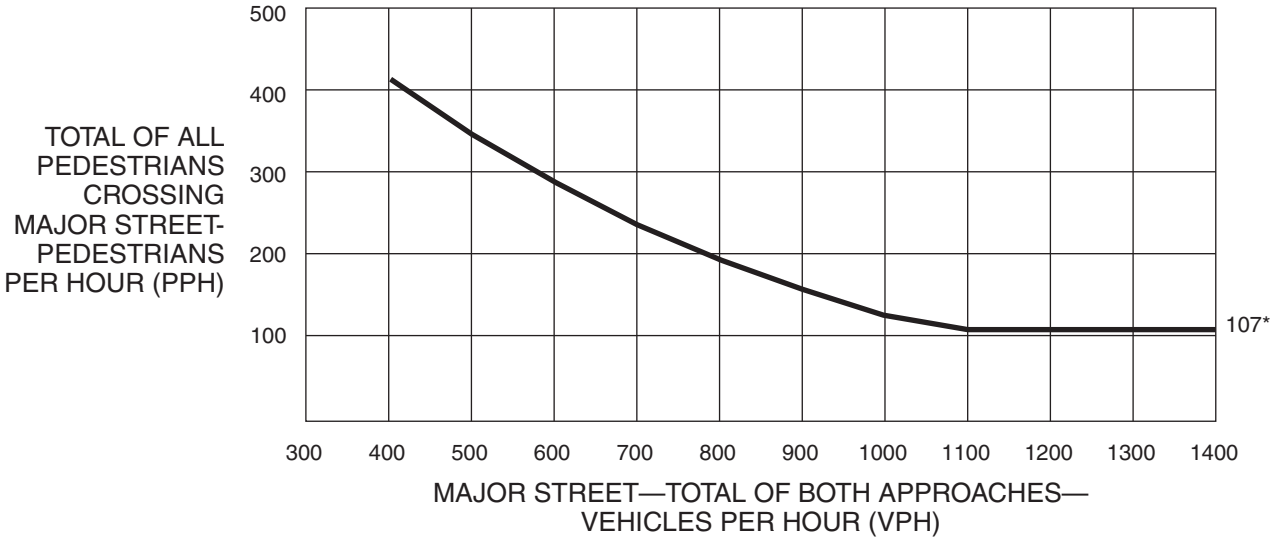

*Note: 107 pph applies as the lower threshold volume.

Figure 4C-6. Warrant 4, Pedestrian Four-Hour Volume (70% Factor)

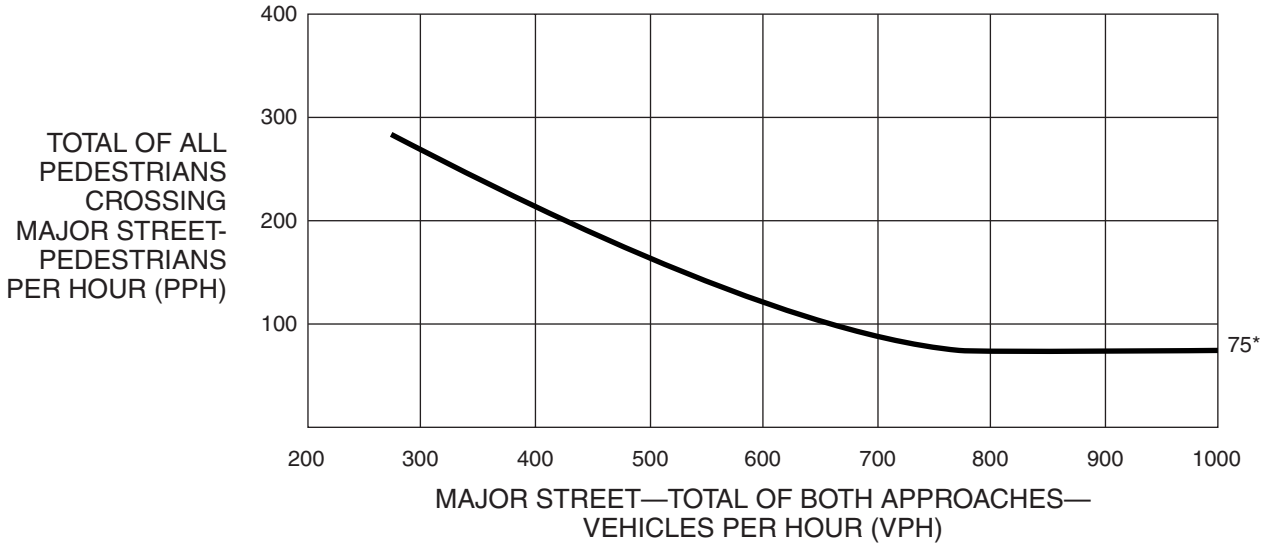

*Note: 75 pph applies as the lower threshold volume.

Figure 4C-7. Warrant 4, Pedestrian Peak Hour

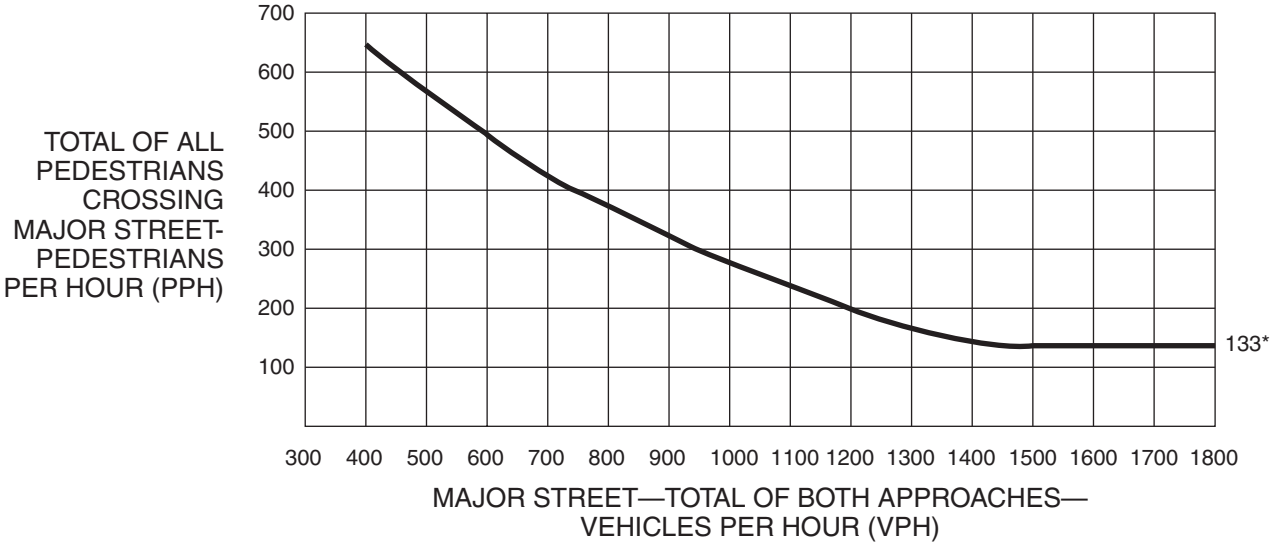

*Note: 133 pph applies as the lower threshold volume.

Figure 4C-8. Warrant 4, Pedestrian Peak Hour (70% Factor)

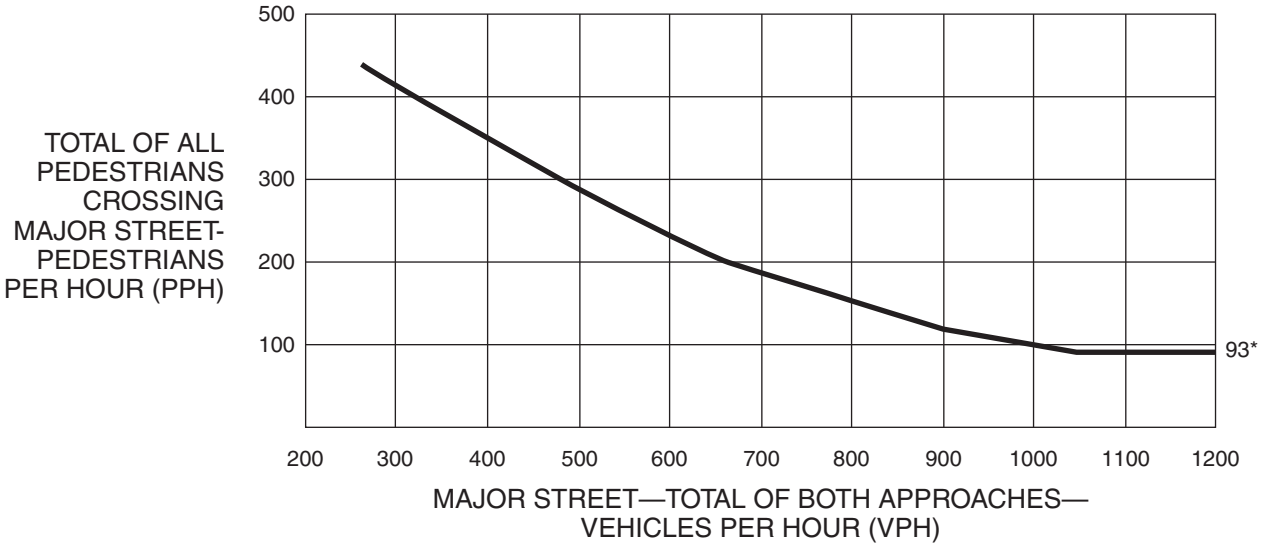

*Note: 93 pph applies as the lower threshold volume.

03 **Before a decision is made to install a traffic control signal, consideration shall be given to the implementation of other remedial measures, such as warning signs and flashers, school speed zones, school crossing guards, or a grade-separated crossing.**

04 **The School Crossing signal warrant shall not be applied at locations where the distance to the nearest traffic control signal along the major street is less than 300 feet, unless the proposed traffic control signal will not restrict the progressive movement of traffic.**

Guidance:

05 *If this warrant is met and a traffic control signal is justified by an engineering study, then:*

A. If it is installed at an intersection or major driveway location, the traffic control signal should also control the minor-street or driveway traffic, should be traffic-actuated, and should include pedestrian detection.

B. If it is installed at a non-intersection crossing, the traffic control signal should be installed at least 100 feet from side streets or driveways that are controlled by STOP or YIELD signs, and should be pedestrian-actuated. If the traffic control signal is installed at a non-intersection crossing, at least one of the signal faces should be over the traveled way for each approach, parking and other sight obstructions should be prohibited for at least 100 feet in advance of and at least 20 feet beyond the crosswalk or site accommodations should be made through curb extensions or other techniques to provide adequate sight distance, and the installation should include suitable standard signs and pavement markings.

C. Furthermore, if it is installed within a signal system, the traffic control signal should be coordinated.

Section 4C.07 Warrant 6, Coordinated Signal System

Support:

01 Progressive movement in a coordinated signal system sometimes necessitates installing traffic control signals at intersections where they would not otherwise be needed in order to maintain proper platooning of vehicles.

Standard:

02 **The need for a traffic control signal shall be considered if an engineering study finds that one of the following criteria is met:**

A. On a one-way street or a street that has traffic predominantly in one direction, the adjacent traffic control signals are so far apart that they do not provide the necessary degree of vehicular platooning.

B. On a two-way street, adjacent traffic control signals do not provide the necessary degree of platooning and the proposed and adjacent traffic control signals will collectively provide a progressive operation.

Guidance:

03 *The Coordinated Signal System signal warrant should not be applied where the resultant spacing of traffic control signals would be less than 1,000 feet.*

Section 4C.08 Warrant 7, Crash Experience

Support:

01 The Crash Experience signal warrant conditions are intended for application where the severity and frequency of crashes are the principal reasons to consider installing a traffic control signal.

Standard:

02 **The need for a traffic control signal shall be considered if an engineering study finds that all of the following criteria are met:**

A. Adequate trial of alternatives with satisfactory observance and enforcement has failed to reduce the crash frequency; and

B. Five or more reported crashes, of types susceptible to correction by a traffic control signal, have occurred within a 12-month period, each crash involving personal injury or property damage apparently exceeding the applicable requirements for a reportable crash; and

C. For each of any 8 hours of an average day, the vehicles per hour (vph) given in both of the 80 percent columns of Condition A in Table 4C-1 (see Section 4C.02), or the vph in both of the 80 percent columns of Condition B in Table 4C-1 exists on the major-street and the higher-volume minor-street approach, respectively, to the intersection, or the volume of pedestrian traffic is not less than 80 percent of the requirements specified in the Pedestrian Volume warrant. These major-street and minor-street volumes shall be for the same 8 hours. On the minor street, the higher volume shall not be required to be on the same approach during each of the 8 hours.

Option:

03 If the posted or statutory speed limit or the 85th-percentile speed on the major street exceeds 40 mph, or if the intersection lies within the built-up area of an isolated community having a population of less than 10,000, the traffic volumes in the 56 percent columns in Table 4C-1 may be used in place of the 80 percent columns.

Section 4C.09 Warrant 8, Roadway Network

Support:

01 Installing a traffic control signal at some intersections might be justified to encourage concentration and organization of traffic flow on a roadway network.

Standard:

02 **The need for a traffic control signal shall be considered if an engineering study finds that the common intersection of two or more major routes meets one or both of the following criteria:**

A. The intersection has a total existing, or immediately projected, entering volume of at least 1,000 vehicles per hour during the peak hour of a typical weekday and has 5-year projected traffic volumes, based on an engineering study, that meet one or more of Warrants 1, 2, and 3 during an average weekday; or

B. The intersection has a total existing or immediately projected entering volume of at least 1,000 vehicles per hour for each of any 5 hours of a non-normal business day (Saturday or Sunday).

03 **A major route as used in this signal warrant shall have at least one of the following characteristics:**

A. It is part of the street or highway system that serves as the principal roadway network for through traffic flow.

B. It includes rural or suburban highways outside, entering, or traversing a city.

C. It appears as a major route on an official plan, such as a major street plan in an urban area traffic and transportation study.

Section 4C.10 Warrant 9, Intersection Near a Grade Crossing

Support:

01 The Intersection Near a Grade Crossing signal warrant is intended for use at a location where none of the conditions described in the other eight traffic signal warrants are met, but the proximity to the intersection of a grade crossing on an intersection approach controlled by a STOP or YIELD sign is the principal reason to consider installing a traffic control signal.

Guidance:

02 *This signal warrant should be applied only after adequate consideration has been given to other alternatives or after a trial of an alternative has failed to alleviate the safety concerns associated with the grade crossing. Among the alternatives that should be considered or tried are:*

A. Providing additional pavement that would enable vehicles to clear the track or that would provide space for an evasive maneuver, or

B. Reassigning the stop controls at the intersection to make the approach across the track a non-stopping approach.

Standard:

03 **The need for a traffic control signal shall be considered if an engineering study finds that both of the following criteria are met:**

A. A grade crossing exists on an approach controlled by a STOP or YIELD sign and the center of the track nearest to the intersection is within 140 feet of the stop line or yield line on the approach; and

B. During the highest traffic volume hour during which rail traffic uses the crossing, the plotted point representing the vehicles per hour on the major street (total of both approaches) and the corresponding vehicles per hour on the minor-street approach that crosses the track (one direction only, approaching the intersection) falls above the applicable curve in Figure 4C-9 or 4C-10 for the existing combination of approach lanes over the track and the distance D, which is the clear storage distance as defined in Section 1A.13.

Guidance:

04 *The following considerations apply when plotting the traffic volume data on Figure 4C-9 or 4C-10:*

A. Figure 4C-9 should be used if there is only one lane approaching the intersection at the track crossing location and Figure 4C-10 should be used if there are two or more lanes approaching the intersection at the track crossing location.

APPENDIX F – ADOT TURN LANE WARRANT CRITERIA

430 TURN LANE DESIGN

This section provides guidance for designing left and right turn lanes for at-grade highway intersections.

430.1 LEFT TURN LANES

In some instances it may be necessary to add the required widening to only one side of the roadway as shown in Figure 430-A. When widening only one side, the taper length is determined by the formula:

$$T = S \times W \qquad \text{for speeds of 45 mph or greater}$$

and by

$$T = \frac{S^2 \times W}{60} \qquad \text{for speeds under 45 mph}$$

where:

T = length of taper
W = width of the added lane
S = posted speed for existing roadways, or design speed for new or reconstructed roadways

Figure 430-A. Left Turn Lane - Widening One Side Only

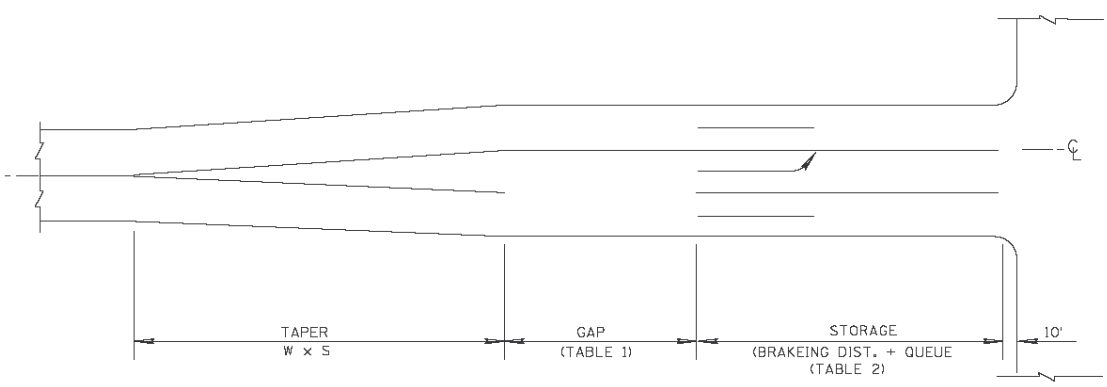

The preferred way of creating a left turn lane is by widening the roadway on both sides equally as shown in Figure 430-B. This minimizes the amount of lateral shifting required for through traffic.
Taper lengths will be reduced by a proportional amount based on the proportion of widening on each side, e.g., by 1/2 for symmetrical widening. Similar adjustments must be made for other lane widths than the standard 12' illustrated.

Figure 430-B. Left Turn Lane - Symmetrical Widening

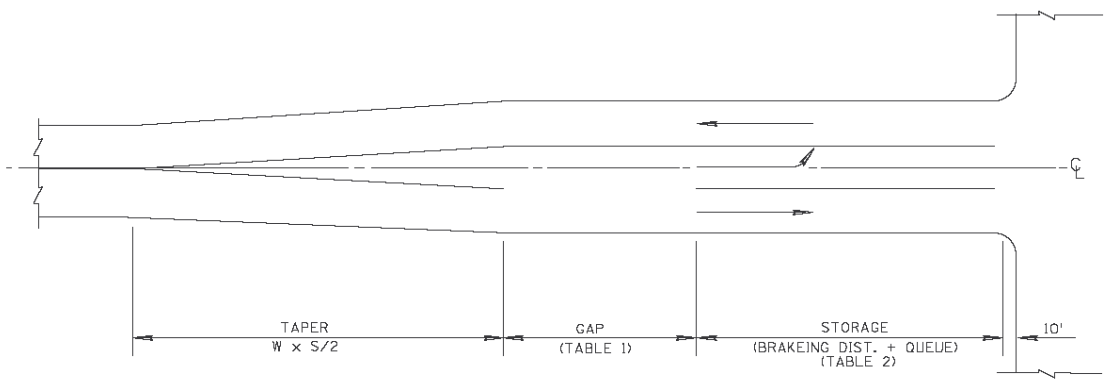

Example: *W = 12'* *Gap = 140'* *Storage = 415'* + 50' = 465'*
S = 65 mph *(From Table 430-1)*
T = 12 x 65 / 2 = 390' ** From Table 430-2*

low ADT, minimum trucks
Total Length = 390' + 140' + 465' = 995'

Gap Length

Table 430-1 provides the length of the gap for left turn lanes. See Standard Drawing 4-M-1.03 for the turn lane standard.

Table 430-1. Left Turn Lane Gap Lengths

POSTED or DESIGN SPEED (mph)	GAP (feet)
< 40	60
40 - 50	90
> 50	140

Storage Length

The storage length is a combination of the braking distance (Table 430-2) and a queue length dependent on the anticipated traffic control for the intersection and the traffic demand at the turn.

storage length = braking distance + queue length

Table 430-2. Braking Distance

POSTED or DESIGN SPEED (mph)	DESIRABLE		MINIMUM		
	BRAKING SPEED (mph)	BRAKING DISTANCE (feet)	ENTERING SPEED (mph)	BRAKING SPEED (mph)	BRAKING DISTANCE (feet)
30	29	80	20	20	20
35	34	115	25	25	40
40	38	150	30	29	50
45	43	200	35	34	85
50	47	245	40	38	120
55	52	300	45	42	145
60	56	360	50	47	200
65	60	415	55	52	265
70	64	490	60	56	315
75	70	585	65	61	400

The "Desirable" braking distance shown in Table 430-2 is based on the assumption that a vehicle will have lost a few miles per hour through retardation by the vehicle's engine and drive train prior to braking and that braking will actually begin when the vehicle is fully into the turn lane. The "Minimum" braking distance shown is based on the assumption of: (a) a drop of 10 mph in the average speed of a vehicle by the time it begins to enter the opening or "gap" of the turn lane; (b) there will be a further reduction in speed through engine retardation while entering the turn lane; and (c) assumed braking will begin once the vehicle is 2/3 of the way into the turn lane (see Figure 430-C).

FIGURE 430-C. Minimum Braking Distance

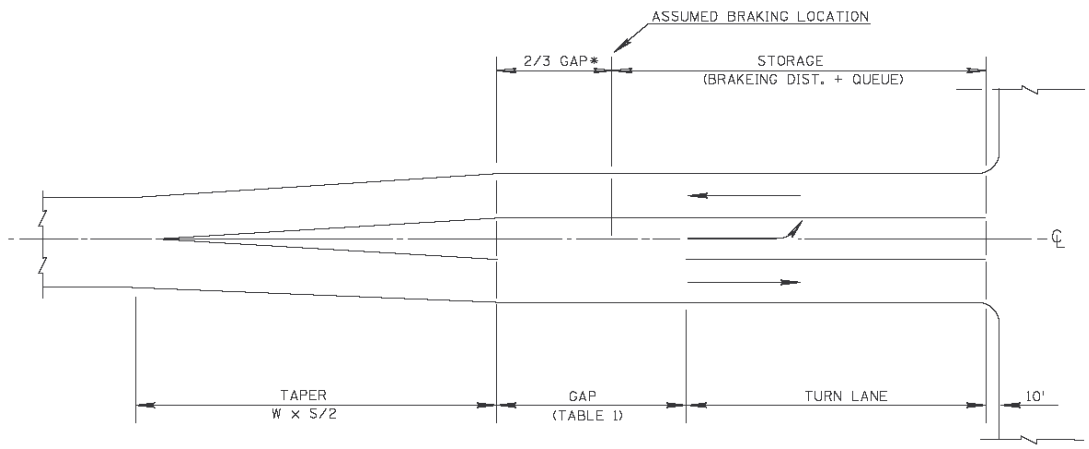

** 2/3 Gap:* *40' for < 40 mph*
60' for 40 - 50 mph
95' for > 50 mph

Example: *W = 12'* *** Gap = 140'* *Storage = 265' *** +50' = 315'*
S = 65 mph *2/3 Gap = 95'*
T = (12 x 65) / 2 = 390' *difference = 45'* **** From Table 430-2*
*** From Table 430-1*

low ADT, minimum trucks
Total Length = 390' + 95' + 315' = 800'
Turn Lane Length = 315' – 45' = 270'

The queue length is the portion of the storage length required to temporarily store turning traffic until conditions allow the turning maneuver to be completed in a safe manner. It is in addition to the length required for braking. The queue length is dependent on the anticipated traffic control for the intersection and the traffic demand at the turn. A traffic analysis may be needed to determine arrival rates and queue lengths.

- Signal Control - The queue length depends on the signal cycle length, the signal phasing arrangement, and the rate of arrivals and departures of left-turning vehicles. Allow 1.5 to 2 times the average number of vehicles that would queue per cycle for periodic heavy demand in traffic flow.
- Cross Road Stop Sign Control - The queue length is based on the number of turning vehicles likely to arrive in the average two minute period within the peak hour. The length should be adjusted for a lack of adequate gaps in opposing through traffic.

- All-Way Stop Sign Control - The queue length is based on the number of turning vehicles likely to arrive in the average two minute period within the peak hour. The length should be further adjusted for a lack of adequate gaps in both opposing through traffic and cross road traffic activity.

Each passenger vehicle and each truck are assumed to be 25 and 60 feet in length, respectively.

The minimum queue length for all traffic control situations should accommodate two passenger vehicles or one passenger vehicle and one truck when the truck percentage is greater than 10%, i.e., 50 foot and 85 foot minimum queue lengths, respectively.

Where a two-way left-turn lane is to be interrupted with a one-way left-turn lane, the two-way left-turn lane should end a sufficient distance in advance of the interruption to allow the placement of a minimum gap and necessary storage (see Standard Drawing M-2).

430.2 RIGHT TURN LANES

Figure 430-D. Right Turn Lanes

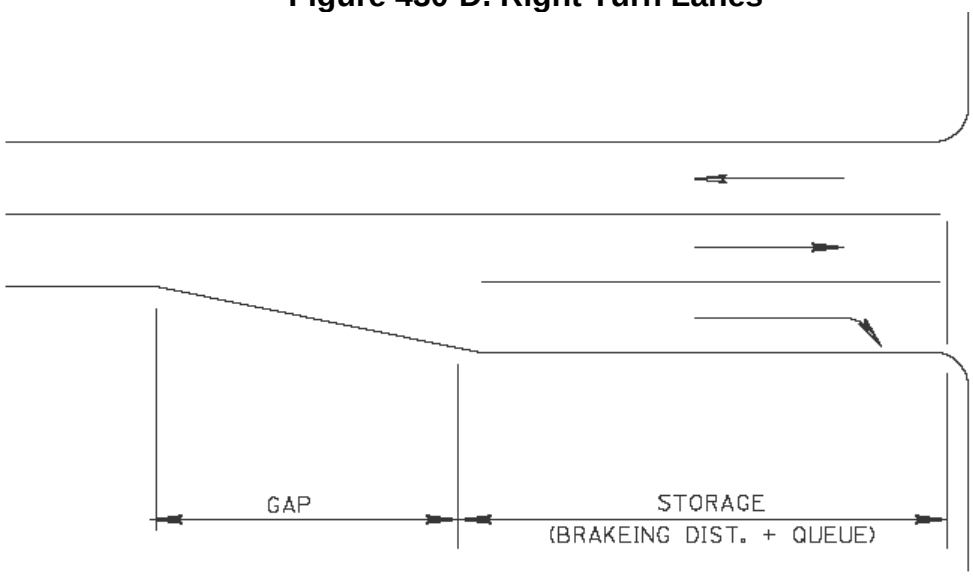

Taper Length

Lengthy tapers are generally not required for right turn lanes, and similarly for left turn lanes where the median width is 30 feet or greater, since the lane may be simply added to the outside of the traveled way; however, a shorter taper equal in length to the gap (Table 430-1) is provided to transition the edge line from the normal pavement cross section to the edge of the turn lane.

Gap Length

The gap for right turn lanes is the same as that for left turn lanes (see Table 430-1).

Storage Length

The storage length for right turn lanes is the same as that for left turn lanes; however, when space available for a turn lane is limited and a yield condition or free-flowing right turn is provided, it may be appropriate to assume that braking continues, not to a stop as with left turns, but rather to the turning speed at the intersection radius return. Where traffic slows to 10 mph to turn right, 20 feet may be deducted from the right turn lane queue length.

430.3 SUMMARY

These guidelines assume that the intersection is not skewed, is on relatively flat grade, does not contain significant vertical or horizontal curves, has adequate sight distance, and has 12-foot wide through lanes.

The "Desirable" design is normally used for new construction or reconstruction of a roadway. The "Minimum" design is normally used for retrofits or minor intersection improvements.

It is recognized that design methodology must be somewhat flexible in meeting the highway users' needs and that circumstances vary from one location to another so that rigid application of rules or guidelines may not fit every situation. Engineering judgment must frequently be exercised in determining the end product. For instance, shorter turn lanes than the minimum established by this guideline may be acceptable if approved in writing by the Regional Traffic Engineer having jurisdiction.

245 TURN LANE WARRANTS

The intent of this policy is to offer guidance to warrant the installation of dedicated left or right turn lanes on state routes, whether during new construction, major reconstruction, or in the course of the encroachment permitting process. **The primary determining factors to warrant an exclusive turn lane shall be: (a) the combination of through traffic volume and turning traffic volume, (b) the posted roadway speed, and (c) the number of through lanes on the roadway.** Note: Dual right- or left-turn lanes should be considered when the turning volume exceeds 300 vehicles per hour. In addition to the criteria presented in the tables below, other factors should be taken into consideration when performing a warrant study such as: shoulder width, percentage of trucks, sight distance, highway grade, horizontal and vertical curvature and crash history.

Right-Turn Lane Warrants

Peak Hour Traffic Volume on the Highway in Advancing Direction	Minimum Peak Hour Right-turn Traffic Volume				
	# of thru lanes per direction				
	1		2		3
	< 45 MPH Posted Speed	≥ 45 MPH Posted Speed	≤ 45 MPH Posted Speed	≥ 45 MPH Posted Speed	All Speeds
≤ 200					
201 – 300	-	30	-	-	-
301 – 400	-	19	-	55	-
401 – 500	85	14	-	30	-
501 – 600	58	12	140	25	-
601 – 700	27	9	80	18	-
701 – 800	20	8	53	15	-
801 – 900	12	7	40	12	-
901 – 1000	9	6	30	11	-
1001 – 1100	8	5	23	9	18
1101 – 1200	7	5	18	8	16
1201 – 1300	6	4	14	8	15
1301 – 1400	6	4	11	6	12
1400+	5	3	8	6	10

Left-Turn Lane Warrants

Peak Hour Traffic Volume on the Highway in Advancing Direction	Minimum Peak Hour Left-turn Traffic Volume			
	# of thru lanes per direction			
	1		2 (Undivided)*	
	< 45 MPH Posted Speed	≥ 45 MPH Posted Speed	≤ 45 MPH Posted Speed	≥ 45 MPH Posted Speed
≤ 200	30	15	-	-
201 – 300	12	12	40	30
301 – 400	12	12	30	25
401 – 500	12	12	25	18
501 – 600	12	12	15	12
601 – 1000	12	12	10	8
1000+	12	8	10	8

* On non-freeway divided highways, left-turn or U-turn lanes should be provided at median breaks.

Volumes and traffic factors utilized should be based on data from ADOT's Multimodal Planning Division, or should be based on current traffic counts as approved by the Regional Traffic Engineer. For encroachment permits, analysis of the relevant through and turning traffic volumes should be completed in the design year as identified in ADOT Traffic Engineering Guidelines and Processes 240. For new construction and major reconstruction, analysis should be performed based on data for the appropriate design year. Turn lane warrant studies should be reviewed and approved by the Regional Traffic Engineer. In cases where the State Highway section in question intersects a route under other jurisdiction, it is recommended that a turning movement analysis be performed on the intersecting route as well.

When it is determined that a turn lane is warranted, shoulder width should be provided as part of the turn lane design in accordance with the ADOT Roadway Design Guidelines, which should be used to determine the minimum continuous usable width of paved shoulder along the turn lanes. Turn lane design should also conform to the guidance in ADOT Traffic Engineering Guidelines and Processes 430.

APPENDIX G – TURN LANE ANALYSIS RESULTS

Appendix H – Turn Lane Analysis Results

	Northbound							
	Left-Turn Lane				Right-Turn Lane			
	Meets ADOT Criteria?			Turn Lane	Meets ADOT Criteria?			Turn Lane
Intersections	2016	2025	2040	Exists?	2016	2025	2040	Exists?
Pioneer Parkway	-	-	-	N/A	N/A	N/A	N/A	**Yes**
Buena Vista Trail	X	✓	✓	**No**	-	-	-	N/A
Longview Road	-	-	-	N/A	✓	✓	✓	**Yes**
Ridge Road	-	-	-	N/A	X	X	X	No
Cliff Rose Road	-	-	-	N/A	X	X	X	**Yes**
Pemberton Drive	✓	✓	✓	**No**	-	-	-	N/A
Merrill Drive	-	-	-	N/A	X	X	✓	**Yes**
McIntosh Drive	X	X	X	No	X	X	X	**Yes**
Kelly Drive	-	-	-	N/A	X	X	✓	**Yes**
Stringfield Drive	X	X	X	No	-	-	-	N/A
Oneal Road	-	-	-	N/A	X	X	✓	**Yes**
Bridle Path Road	X	X	X	No	X	X	X	No
Lariat Lane	-	-	-	N/A	X	X	X	**Yes**
Levie Lane	X	X	X	No	-	-	-	N/A
Mendiburo Way	X	X	X	No	-	-	-	N/A
Single Tree Street	-	-	-	N/A	✓	✓	✓	**Yes**
Rainmaker	X	✓	✓	**No**	-	-	-	N/A
Love Ln	X	X	X	No	-	-	-	N/A
Shane Drive	-	-	-	N/A	X	X	X	No
Granite Park Drive	X	X	X	**Yes**	-	-	-	N/A
Granite Vista Road	X	X	X	No	-	-	-	N/A
Glenshandra Drive	-	-	-	N/A	✓	✓	✓	**Yes**
Granite Oaks Drive	X	X	X	No	✓	✓	✓	**Yes**
Bard Ranch Road	-	-	-	N/A	✓	✓	✓	**Yes**
Buchanan Drive	X	X	X	No	-	-	-	N/A
Scarlett Drive	X	X	X	No	-	-	-	N/A
Chipmunk Road	-	-	-	N/A	X	X	X	No
Blackjack Ridge Road	-	-	-	N/A	X	✓	✓	**No**
American Ranch Road	✓	✓	✓	**Yes**	X	X	X	**Yes**
Outer Loop Road	X	X	X	No	X	✓	✓	**Yes**
Sharps Road	X	✓	✓	**No**	-	-	-	N/A
Stazenski Road	X	✓	✓	**No**	X	✓	✓	**Yes**
Cielo Grande	X	✓	✓	**No**	X	X	X	No
Marlow Road	-	-	-	N/A	X	X	X	No
Whispering Canyon Dr	X	✓	✓	**Yes**	-	-	-	N/A
Almosta Ranch Rd	✓	✓	✓	**Yes**	X	X	X	No
Inscription Canyon Dr	X	✓	✓	**Yes**	-	-	-	N/A
Nancy Drive (To West)	X	X	X	No	-	-	-	N/A
Nancy Drive (To East)	-	-	-	N/A	X	X	X	No

✓	Meets ADOT Criteria
X	Does Not Meet ADOT Criteria
-	Not Applicable - Minor Street Leg Does Not Exist (T-Intersection)
Yes	Turn Lane Exists
No	Turn Lane Does Not Exist & ADOT Turn Lane Criteria is Met in 2016, 2025 or 2040

	Southbound							
	Left-Turn Lane				Right-Turn Lane			
	Meets ADOT Criteria?			Turn Lane Exists?	Meets ADOT Criteria?			Turn Lane Exists?
Intersections	2016	2025	2040		2016	2025	2040	
Pioneer Parkway	✓	✓	✓	**Yes**	-	-	-	N/A
Buena Vista Trail	-	-	-	N/A	**X**	**X**	**X**	No
Longview Road	**X**	**X**	**X**	No	-	-	-	N/A
Ridge Road	**X**	**X**	**X**	No	-	-	-	N/A
Cliff Rose Road	**X**	**X**	**X**	No	-	-	-	N/A
Pemberton Drive	-	-	-	N/A	**X**	**X**	**X**	No
Merrill Drive	**X**	**X**	**X**	No	-	-	-	N/A
McIntosh Drive	**X**	**X**	**X**	No	**X**	**X**	**X**	No
Kelly Drive	**X**	**X**	**X**	No	-	-	-	N/A
Stringfield Drive	-	-	-	N/A	**X**	**X**	**X**	No
Oneal Road	**X**	**X**	**X**	No	-	-	-	N/A
Bridle Path Road	**X**	**X**	**X**	No	**X**	**X**	**X**	No
Lariat Lane	**X**	**X**	**X**	No	-	-	-	N/A
Levie Lane	-	-	-	N/A	**X**	**X**	**X**	No
Mendiburo Way	-	-	-	N/A	**X**	**X**	**X**	No
Single Tree Street	**X**	**X**	**X**	No	-	-	-	N/A
Rainmaker	-	-	-	N/A	**X**	**X**	**X**	No
Love Ln	-	-	-	N/A	**X**	**X**	**X**	No
Shane Drive	**X**	**X**	**X**	No	-	-	-	N/A
Granite Park Drive	-	-	-	N/A	**X**	**X**	**X**	No
Granite Vista Road	-	-	-	N/A	**X**	**X**	**X**	No
Glenshandra Drive	**X**	**X**	**X**	No	-	-	-	N/A
Granite Oaks Drive	**X**	**X**	**X**	No	**X**	**X**	**X**	**Yes**
Bard Ranch Road	**X**	**X**	**X**	No	-	-	-	N/A
Buchanan Drive	-	-	-	N/A	**X**	**X**	**X**	No
Scarlett Drive	-	-	-	N/A	**X**	**X**	**X**	No
Chipmunk Road	**X**	**X**	**X**	No	-	-	-	N/A
Blackjack Ridge Road	**X**	**X**	**X**	No	-	-	-	N/A
American Ranch Road	**X**	**X**	**X**	**Yes**	**X**	**X**	**X**	**Yes**
Outer Loop Road	✓	✓	✓	**No**	**X**	**X**	**X**	No
Sharps Road	-	-	-	N/A	**X**	**X**	**X**	No
Stazenski Road	**X**	**X**	**X**	No	**X**	**X**	**X**	No
Cielo Grande	**X**	**X**	**X**	No	**X**	**X**	**X**	No
Marlow Road	**X**	**X**	**X**	No	-	-	-	N/A
Whispering Canyon Dr	**X**	**X**	**X**	No	**X**	**X**	**X**	No
Almosta Ranch Rd	**X**	**X**	**X**	No	**X**	**X**	**X**	No
Inscription Canyon Dr	-	-	-	N/A	**X**	**X**	**X**	No
Nancy Drive (To West)	**X**	**X**	**X**	No	-	-	-	N/A
Nancy Drive (To East)	-	-	-	N/A	**X**	**X**	**X**	No

✓	Meets ADOT Criteria
X	Does Not Meet ADOT Criteria
-	Not Applicable - Minor Street Leg Does Not Exist (T-Intersection)
Yes	Turn Lane Exists
No	Turn Lane Does Not Exist & ADOT Turn Lane Criteria is Met in 2016, 2025 or 2040

APPENDIX H –DIAGRAMS OF IMPROVEMENT ALTERNATIVES

Appendix H.1 – Alternative A: Buena Vista Trail and Longview Drive Realignment
Appendix H.2 – Alternative B: Buena Vista Trail and Longview Drive TWLTL with Original Alignment
Appendix H.3 – Alternative C: Cliff Rose Road and Pemberton Drive
Appendix H.4 – Alternative D: McIntosh Drive to Merrill Drive
Appendix H.5 – Alternative E: Kelly Drive, Stringfield Drive, and Oneal Road
Appendix H.6 – Alternative F: Silver Juniper Ranch Road, Lariat Lane, Levie Lane
Appendix H.7 – Alternative G: Rainmaker/Single Tree Street
Appendix H.8 – Alternative H: Granite Park Drive
Appendix H.9 – Alternative I: Glenshandra Drive
Appendix H.10 – Alternative J: Granite Oaks Drive (Trailhead)
Appendix H.11 – Alternative K: Bard Ranch Road
Appendix H.12 – Alternative L: Buchanan Drive
Appendix H.13 – Alternative M: Blackjack Ridge Road
Appendix H.14 – Alternative N: American Ranch Road
Appendix H.15 – Alternative O: Outer Loop Road, Unsignalized
Appendix H.16 – Alternative P: Outer Loop Road, Signalized
Appendix H.17 – Alternative Q: Outer Loop Road, Single-Lane Modern Roundabout
Appendix H.18 – Alternative R: Sharps Road
Appendix H.19 – Alternative S: Stazenski Road/Williamson Valley Ranch Road
Appendix H.20 – Alternative T: Cielo Grande and Dome Road

APPENDIX H.1 – ALTERNATIVE A: BUENA VISTA TRAIL AND LONGVIEW DRIVE REALIGNMENT

360' TAPER
140' GAP
205' STORAGE
WILLIAMSON VALLEY ROAD
LONGVIEW DR
TOTAL NEW PAVEMENT: 4,170 SY
BUENA VISTA TRL
205' STORAGE
140' GAP
360' TAPER
RECONSTRUCTED ROADWAY LENGTH: 1,040' (2,900 CY)
Assuming Average Depth of 2'
N

APPENDIX H.2 – ALTERNATIVE B: BUENA VISTA TRAIL AND LONGVIEW DRIVE TWLTL

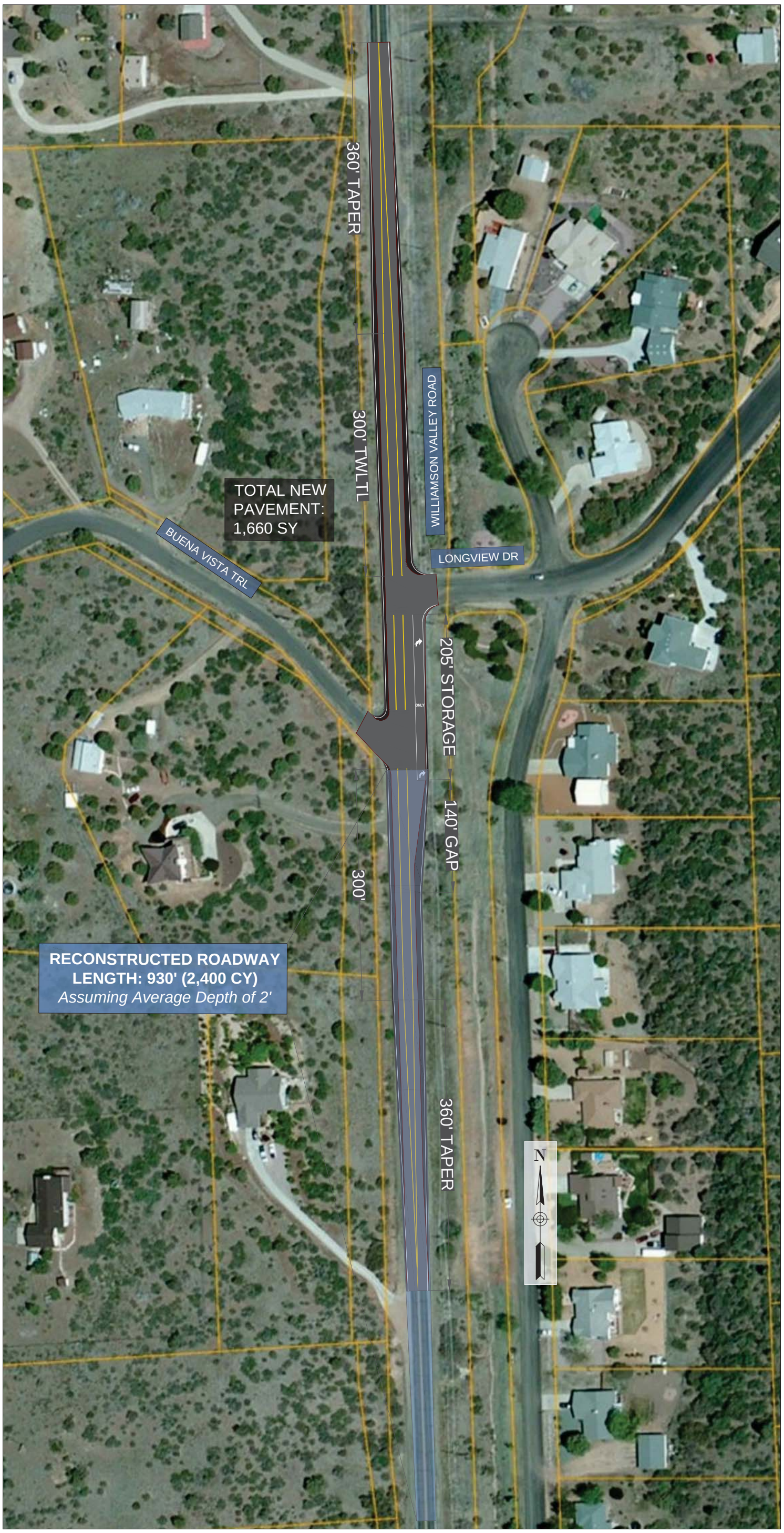
360' TAPER
300' TWLTL
WILLIAMSON VALLEY ROAD
TOTAL NEW PAVEMENT: 1,660 SY
BUENA VISTA TRL
LONGVIEW DR
205' STORAGE
140' GAP
300'
RECONSTRUCTED ROADWAY LENGTH: 930' (2,400 CY)
Assuming Average Depth of 2'
360' TAPER
N

APPENDIX H.3 – ALTERNATIVE C: CLIFF ROSE ROAD AND PEMBERTON DRIVE

360' TAPER
140' GAP
WILLIAMSON VALLEY ROAD
205' STORAGE
TOTAL NEW PAVEMENT: 2,270 SY
CLIFF ROSE RD
PEMBERTON DR
205' STORAGE
360' TWLTL
VEGETATION CUT BACK AREA: 700 SF (0.016 ACRES, APPROX 6 TREES)
RECONSTRUCTED ROADWAY LENGTH: 720' (2,230 CY)
Assuming Average Depth of 2'
140' GAP
EMBANKMENT CUT BACK AREA: 920 SF (510 CY)
Assuming Average Depth of 15'
360' TAPER
N
RIDGE DRIVE

APPENDIX H.4 – ALTERNATIVE D: MCINTOSH DRIVE TO MERRILL DRIVE

360' TAPER
300' TWL TL
MCINTOSH DR
205' STORAGE
140' GAP
WILLIAMSON VALLEY ROAD
NEBEKER CIR
N
TOTAL NEW PAVEMENT: 2,790 SY
MERRILL DR
205' STORAGE
300' TWL TL
140' GAP
360' TAPER

APPENDIX H.5 – ALTERNATIVE E: KELLY DRIVE, STRINGFIELD DRIVE, AND ONEAL ROAD

400' TWLTL
ONEAL RD
205' STORAGE
RECONSTRUCTED ROADWAY
LENGTH: 830' (3,040 CY)
Assuming Average Depth of 2'
TOTAL NEW
PAVEMENT:
1,990 SY
140' TAPER
STRINGFIELD DR
WILLIAMSON VALLEY ROAD
N
KELLY DR
205' STORAGE
140' TAPER
300' TWL TL
360' TAPER

APPENDIX H.6 – ALTERNATIVE F: SILVER JUNIPER RANCH ROAD, LARIAT LANE, LEVIE LANE

360' TAPER
MENDIBURO WAY
STAGE LINE TRAIL
TOTAL NEW PAVEMENT: 2,500 SY
WILLIAMSON VALLEY ROAD
LEVIE LANE
LARIAT LANE
205' STORAGE
300' TWLTL
140' GAP
SILVER JUNIPER RANCH RD
360' TAPER
N

APPENDIX H.7 – ALTERNATIVE G: RAINMAKER/SINGLE TREE STREET

360' TAPER
LOVE LANE
WILLIAMSON VALLEY ROAD
690' TWLTL
STAGE LINE TRAIL
SHORT SPUR TRL
RAINMAKER
SINGLE TREE ST
205' STORAGE
TOTAL NEW
PAVEMENT:
2,520 SY
300' TWLTL
140' TAPER
360' TAPER

APPENDIX H.8 – ALTERNATIVE H: GRANITE PARK DRIVE

RECONSTRUCTED ROADWAY
LENGTH: 810' (1,740 CY)
Assuming Average Depth of 2'
GRANITE PARK DR
WILLIAMSON VALLEY ROAD
N

APPENDIX H.9 – ALTERNATIVE I: GLENSHANDRA DRIVE

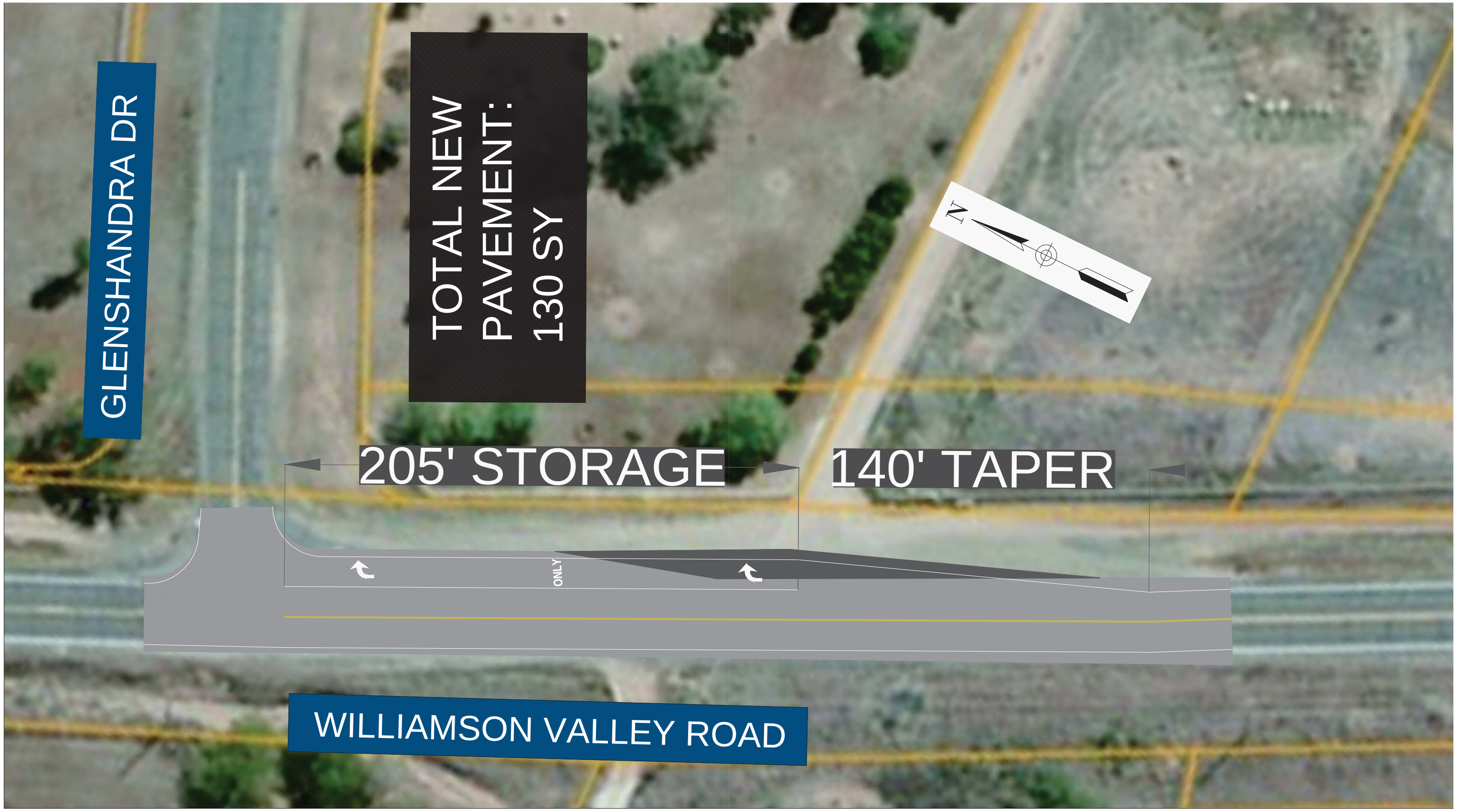
GLENSHANDRA DR
TOTAL NEW PAVEMENT: 130 SY
N
205' STORAGE
140' TAPER
ONLY
WILLIAMSON VALLEY ROAD

APPENDIX H.10 – ALTERNATIVE J: GRANITE OAKS DRIVE (TRAILHEAD)

GRANITE OAKS DR
205' STORAGE
140' TAPER
360' TAPER
300' TWLTL
300' TWLTL
360' TAPER
WILLIAMSON VALLEY ROAD
205' STORAGE
140' TAPER
TOTAL NEW PAVEMENT: 1,250 SY

APPENDIX H.11 – ALTERNATIVE K: BARD RANCH ROAD

BARD RANCH RD
TOTAL NEW PAVEMENT: 1,180 SY
N
360' TAPER
140' GAP
205' STORAGE
ONLY
205' STORAGE
140' TAPER
ONLY
WILLIAMSON VALLEY ROAD
360' TAPER

APPENDIX H.12 – ALTERNATIVE L: BUCHANAN DRIVE

360' TAPER
205' STORAGE
140' GAP
360' TAPER
ONLY
WILLIAMSON VALLEY ROAD
BUCHANAN DR
TOTAL NEW PAVEMENT: 1,070 SY
N

APPENDIX H.13 – ALTERNATIVE M: BLACKJACK RIDGE ROAD

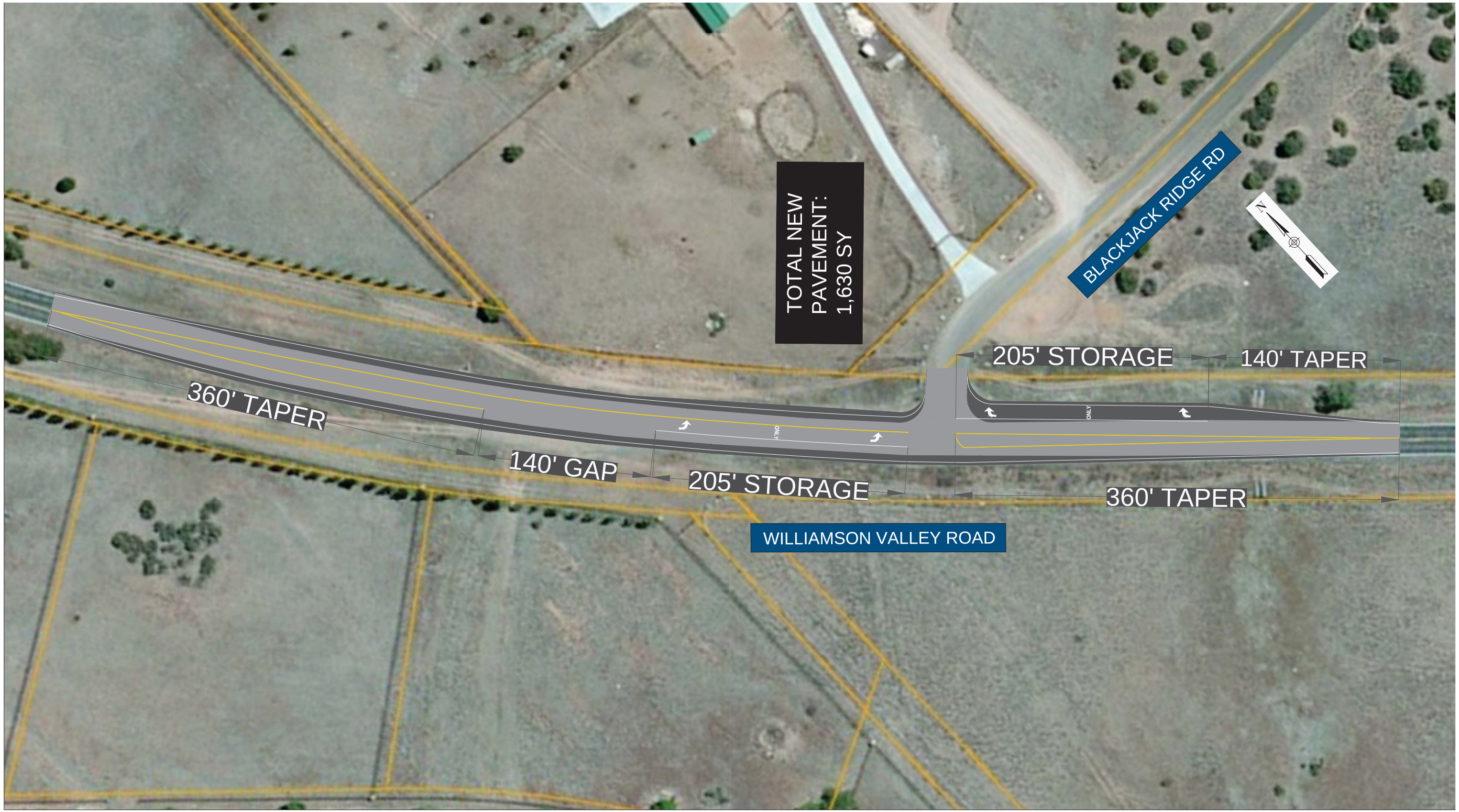
TOTAL NEW PAVEMENT: 1,630 SY
BLACKJACK RIDGE RD
N
205' STORAGE
140' TAPER
360' TAPER
140' GAP
205' STORAGE
360' TAPER
WILLIAMSON VALLEY ROAD

APPENDIX H.14 – ALTERNATIVE N: AMERICAN RANCH ROAD

205' STORAGE
140' TAPER
WILLIAMSON VALLEY ROAD
ONLY
ONLY
N
205' STORAGE
140' GAP
360' TAPER
AMERICAN RANCH RD
TOTAL NEW
PAVEMENT:
410 SY

APPENDIX H.15 – ALTERNATIVE D: OUTER LOOP ROAD, UNSIGNALIZED

OUTER LOOP RD
WILLIAMSON VALLEY ROAD
205' STORAGE
140' GAP
140' TAPER
360' TAPER
140' GAP
280' STORAGE
205' STORAGE
140' GAP
360' TAPER
OLD STAGE RD
TOTAL NEW PAVEMENT: 1,840 SY

APPENDIX H.16 – ALTERNATIVE P: OUTER LOOP ROAD, SIGNALIZED

OUTER LOOP RD
WILLIAMSON VALLEY ROAD
205' STORAGE
140' TAPER
360' TAPER
140' GAP
280' STORAGE
100'
205' STORAGE
140' GAP
360' TAPER
OLD STAGE RD
TOTAL NEW PAVEMENT: 2,010 SY

APPENDIX H.17 – ALTERNATIVE Q: OUTER LOOP ROAD, SINGLE-LANE ROUNDABOUT

WILLIAMSON VALLEY ROAD
OUTER LOOP RD
OLD STAGE RD
N

APPENDIX H.18 – ALTERNATIVE R: SHARPS ROAD

WILLIAMSON VALLEY ROAD
360' TAPER
205' STORAGE
140' GAP
360' TAPER
SHARPS RD
TOTAL NEW PAVEMENT: 1,050 SY
ONLY
N

APPENDIX H.19 – ALTERNATIVE S: STAZENSKI ROAD/WILLIAMSON VALLEY RANCH ROAD

360' TAPER
140' GAP
205' STORAGE
WILLIAMSON VALLEY ROAD
STAZENSKI RD
WILLIAMSON VALLEY RANCH RD
TOTAL NEW PAVEMENT: 1,290 SY
205' STORAGE
205' STORAGE
140' GAP
140' TAPER
360' TAPER
N

APPENDIX H.20 – ALTERNATIVE T: CIELO GRANDE AND DOME ROAD

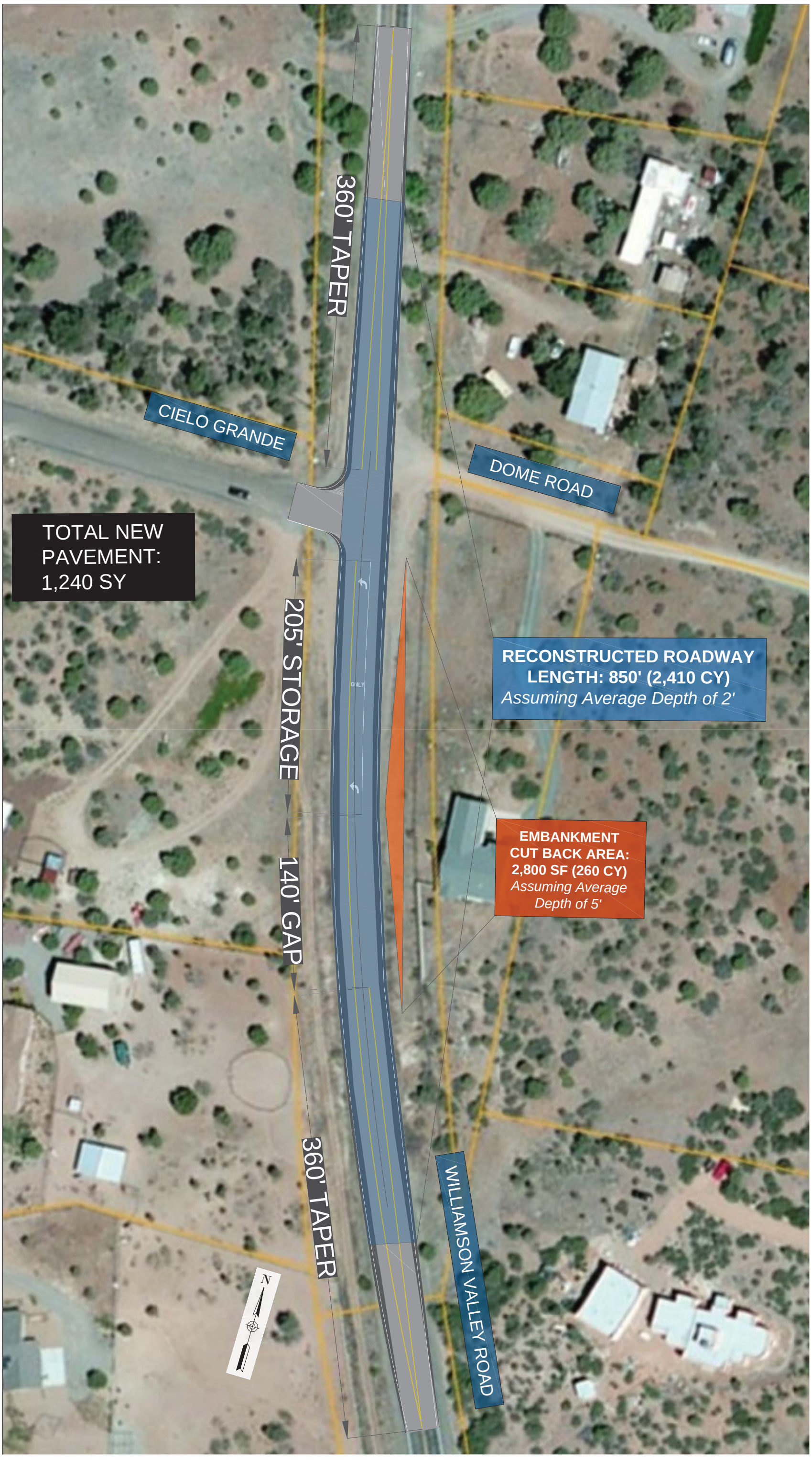
360' TAPER
CIELO GRANDE
DOME ROAD
TOTAL NEW PAVEMENT: 1,240 SY
205' STORAGE
RECONSTRUCTED ROADWAY LENGTH: 850' (2,410 CY)
Assuming Average Depth of 2'
EMBANKMENT CUT BACK AREA: 2,800 SF (260 CY)
Assuming Average Depth of 5'
140' GAP
360' TAPER
WILLIAMSON VALLEY ROAD
N

APPENDIX I – PRELIMINARY COST ESTIMATES

Estimated Unit Costs

Roadway Item	Unit	Unit Price
Asphalt Concrete Pavement	SQ YD	$20.00
Earthwork Cut	CU YD	$20.00
Earthwork Fill	CU YD	$30.00
Roadway Reconstruction (ISD)	CU YD	$40.00
Tree Removal	EA	$500.00
Culvert Headwall	EA	$5,000.00
Culvert Extension	LF	$300.00
Drainage Reconstruction	LS	N/A
Utility Relocation	LS	N/A
Guardrail Relocation	LF	$20.00
Stripe Obliteration	LF	$2.00
White Pavement Marking	LF	$0.10
Yellow Pavement Marking	LF	$0.10
Pavement Marking ARROW	EA	$100.00
Pavement Marking ONLY	EA	$130.00
Traffic Signal Equipment and Installation	EA	$210,000.00
Single-Lane Roundabout	EA	$1,000,000.00
Right-of-Way	LS	N/A

Mobilization, Design, and Administrative Costs (Percentage of Subtotal)	
Mobilization	10%
Traffic Control	5%
Erosion Control	1%
Construction Engineering	20%
Construction Contingencies	5%
Engineering Design	10%
Post Design	1%

Preliminary Cost Estimate

Alternative A
Location: Buena Vista Trail and Longview Drive
Description: Realign Buena Vista Trail and Longview Drive and add NB and SB left-turn lanes. Reconstruct roadway south of intersection to improve sight distance related to vertical curvature.

Roadway Item	Unit	Quantity	Unit Price	Amount
Pavement Removal	CU YD	356	$10.00	**$3,558.85**
Asphalt Concrete Pavement	SQ YD	4,170	$20.00	**$83,400.00**
Earthwork Cut	CU YD	4,382	$20.00	**$87,648.00**
Earthwork Fill	CU YD	498	$30.00	**$14,925.99**
Roadway Reconstruction (ISD)	CU YD	2,900	$40.00	**$116,000.00**
Tree Removal	EA	0	$500.00	**$0.00**
Culvert Headwall	EA	2	$5,000.00	**$10,000.00**
Culvert Extension	LF	200	$300.00	**$60,000.00**
Drainage Reconstruction	LS	N/A	N/A	**TBD**
Utility Relocation	LS	N/A	N/A	**TBD**
Guardrail Relocation	LF	0	$20.00	**$0.00**
Stripe Obliteration	LF	5,845	$2.00	**$11,690.00**
White Pavement Marking	LF	3,495	$0.10	**$349.50**
Yellow Pavement Marking	LF	4,260	$0.10	**$426.00**
Pavement Marking ARROW	EA	6	$100.00	**$600.00**
Pavement Marking ONLY	EA	3	$130.00	**$390.00**
Traffic Signal Equipment and Installation	EA	0	$210,000.00	**$0.00**
Single-Lane Roundabout	EA	0	$1,000,000.00	**$0.00**
Right-of-Way	LS	TBD	TBD	**TBD**
Subtotal				**$388,988.34**

Mobilization, Design, and Administrative Costs		
	Percentage of Subtotal	**Amount**
Mobilization	10%	$38,898.83
Traffic Control	5%	$19,449.42
Erosion Control	1%	$3,889.88
Construction Engineering	10%	$38,898.83
Construction Contingencies	5%	$19,449.42
Engineering Design	10%	$38,898.83
Post Design	1%	$3,889.88
Total Mobilization and Administrative Costs		**$163,375.10**

Grand Total (Preliminary Estimate)	**$552,363.45**

Preliminary Cost Estimate

Alternative B
Location: Buena Vista Trail and Longview Drive
Description: TWLTL from 300 feet north of Longview Drive to 300 ft south of Buena Vista Trail (no realignment). Reconstruct roadway south of intersection to improve sight distance related to vertical curvature.

Roadway Item	Unit	Quantity	Unit Price	Amount
Pavement Removal	CU YD	0	$10.00	**$0.00**
Asphalt Concrete Pavement	SQ YD	1,660	$20.00	**$33,200.00**
Earthwork Cut	CU YD	0	$20.00	**$0.00**
Earthwork Fill	CU YD	0	$30.00	**$0.00**
Roadway Reconstruction (ISD)	CU YD	2,400	$40.00	**$96,000.00**
Tree Removal	EA	0	$500.00	**$0.00**
Culvert Headwall	EA	0	$5,000.00	**$0.00**
Culvert Extension	LF	0	$300.00	**$0.00**
Drainage Reconstruction	LS	N/A	N/A	**TBD**
Utility Relocation	LS	N/A	N/A	**TBD**
Guardrail Relocation	LF	0	$20.00	**$0.00**
Stripe Obliteration	LF	5,280	$2.00	**$10,560.00**
White Pavement Marking	LF	2,845	$0.10	**$284.50**
Yellow Pavement Marking	LF	5,280	$0.10	**$528.00**
Pavement Marking ARROW	EA	2	$100.00	**$200.00**
Pavement Marking ONLY	EA	1	$130.00	**$130.00**
Traffic Signal Equipment and Installation	EA	0	$210,000.00	**$0.00**
Single-Lane Roundabout	EA	0	$1,000,000.00	**$0.00**
Right-of-Way	LS	N/A	N/A	**$0.00**
Subtotal				**$140,902.50**

Mobilization, Design, and Administrative Costs		
	Percentage of Subtotal	**Amount**
Mobilization	10%	$14,090.25
Traffic Control	5%	$7,045.13
Erosion Control	1%	$1,409.03
Construction Engineering	10%	$14,090.25
Construction Contingencies	5%	$7,045.13
Engineering Design	10%	$14,090.25
Post Design	1%	$1,409.03
Total Mobilization and Administrative Costs		**$59,179.05**

Grand Total (Preliminary Estimate)	**$200,081.55**

Preliminary Cost Estimate

Alternative C
Location: Cliff Rose Road and Pemberton Drive
Description: Realign Pemberton Drive and add NB and SB left-turn lanes. Reconstruct roadway south of intersection to improve sight distance related to vertical curvature. Cut back embankment on the west side of Williamson Valley Road, south of Pemberton Drive.

Roadway Item	Unit	Quantity	Unit Price	Amount
Pavement Removal	CU YD	178	$10.00	**$1,776.37**
Asphalt Concrete Pavement	SQ YD	2,170	$20.00	**$43,400.00**
Earthwork Cut	CU YD	510	$20.00	**$10,200.00**
Earthwork Fill	CU YD	419	$30.00	**$12,576.00**
Roadway Reconstruction (ISD)	CU YD	2,230	$40.00	**$89,200.00**
Tree Removal	EA	6	$500.00	**$3,000.00**
Culvert Headwall	EA	2	$5,000.00	**$10,000.00**
Culvert Extension	LF	160	$300.00	**$48,000.00**
Drainage Reconstruction	LS	N/A	N/A	**TBD**
Utility Relocation	LS	N/A	N/A	**TBD**
Guardrail Relocation	LF	0	$20.00	**$0.00**
Stripe Obliteration	LF	6,000	$2.00	**$12,000.00**
White Pavement Marking	LF	3,435	$0.10	**$343.50**
Yellow Pavement Marking	LF	4,260	$0.10	**$426.00**
Pavement Marking ARROW	EA	6	$100.00	**$600.00**
Pavement Marking ONLY	EA	3	$130.00	**$390.00**
Traffic Signal Equipment and Installation	EA	0	$210,000.00	**$0.00**
Single-Lane Roundabout	EA	0	$1,000,000.00	**$0.00**
Right-of-Way	LS	N/A	N/A	**$0.00**
Subtotal				**$231,911.87**

		Mobilization, Design, and Administrative Costs
	Percentage of Subtotal	**Amount**
Mobilization	10%	$23,191.19
Traffic Control	5%	$11,595.59
Erosion Control	1%	$2,319.12
Construction Engineering	10%	$23,191.19
Construction Contingencies	5%	$11,595.59
Engineering Design	10%	$23,191.19
Post Design	1%	$2,319.12
Total Mobilization and Administrative Costs		**$97,402.99**

Grand Total (Preliminary Estimate)	**$329,314.86**

Preliminary Cost Estimate

Alternative D
Location: McIntosh Drive to Merrill Drive
Description: TWLTL from 300 feet north of McIntosh Drive to 300 feet south of Merrill Drive, Extend right-turn lane at Merrill Drive

Roadway Item	Unit	Quantity	Unit Price	Amount
Pavement Removal	CU YD	0	$10.00	**$0.00**
Asphalt Concrete Pavement	SQ YD	2,790	$20.00	**$55,800.00**
Earthwork Cut	CU YD	0	$20.00	**$0.00**
Earthwork Fill	CU YD	0	$30.00	**$0.00**
Roadway Reconstruction (ISD)	CU YD	0	$40.00	**$0.00**
Tree Removal	EA	0	$500.00	**$0.00**
Culvert Headwall	EA	0	$5,000.00	**$0.00**
Culvert Extension	LF	0	$300.00	**$0.00**
Drainage Reconstruction	LS	N/A	N/A	**TBD**
Utility Relocation	LS	N/A	N/A	**TBD**
Guardrail Relocation	LF	175	$20.00	**$3,500.00**
Stripe Obliteration	LF	10,112	$2.00	**$20,224.00**
White Pavement Marking	LF	4,590	$0.10	**$459.00**
Yellow Pavement Marking	LF	8,220	$0.10	**$822.00**
Pavement Marking ARROW	EA	4	$100.00	**$400.00**
Pavement Marking ONLY	EA	2	$130.00	**$260.00**
Traffic Signal Equipment and Installation	EA	0	$210,000.00	**$0.00**
Single-Lane Roundabout	EA	0	$1,000,000.00	**$0.00**
Right-of-Way	LS	N/A	N/A	**$0.00**
Subtotal				**$81,465.00**

		Mobilization, Design, and Administrative Costs
	Percentage of Subtotal	**Amount**
Mobilization	10%	$8,146.50
Traffic Control	5%	$4,073.25
Erosion Control	1%	$814.65
Construction Engineering	10%	$8,146.50
Construction Contingencies	5%	$4,073.25
Engineering Design	10%	$8,146.50
Post Design	1%	$814.65
Total Mobilization and Administrative Costs		**$34,215.30**

Grand Total (Preliminary Estimate)	**$115,680.30**

Preliminary Cost Estimate

Alternative E
Location: Kelly Drive, Stringfield Drive, and Oneal Road
Description: TWLTL from 400 feet north of Oneal Road to 300 ft south of Kelly Drive. Realign Oneal Road, and extend NB right-turn lanes at Kelly Drive and Oneal Road. Reconstruct roadway north of Kelly Drive to improve sight distance related to vertical curvature.

Roadway Item	Unit	Quantity	Unit Price	Amount
Pavement Removal	CU YD	513	$10.00	**$5,130.00**
Asphalt Concrete Pavement	SQ YD	1,990	$20.00	**$39,800.00**
Earthwork Cut	CU YD	339	$20.00	**$6,774.00**
Earthwork Fill	CU YD	0	$30.00	**$0.00**
Roadway Reconstruction (ISD)	CU YD	3,040	$40.00	**$121,600.00**
Tree Removal	EA	0	$500.00	**$0.00**
Culvert Headwall	EA	0	$5,000.00	**$0.00**
Culvert Extension	LF	0	$300.00	**$0.00**
Drainage Reconstruction	LS	N/A	N/A	**TBD**
Utility Relocation	LS	N/A	N/A	**TBD**
Guardrail Relocation	LF	0	$20.00	**$0.00**
Stripe Obliteration	LF	8,308	$2.00	**$16,616.00**
White Pavement Marking	LF	5,470	$0.10	**$547.00**
Yellow Pavement Marking	LF	7,220	$0.10	**$722.00**
Pavement Marking ARROW	EA	4	$100.00	**$400.00**
Pavement Marking ONLY	EA	2	$130.00	**$260.00**
Traffic Signal Equipment and Installation	EA	0	$210,000.00	**$0.00**
Single-Lane Roundabout	EA	0	$1,000,000.00	**$0.00**
Right-of-Way	LS	N/A	N/A	**$0.00**
Subtotal				**$191,849.00**

		Mobilization, Design, and Administrative Costs
	Percentage of Subtotal	**Amount**
Mobilization	10%	$19,184.90
Traffic Control	5%	$9,592.45
Erosion Control	1%	$1,918.49
Construction Engineering	10%	$19,184.90
Construction Contingencies	5%	$9,592.45
Engineering Design	10%	$19,184.90
Post Design	1%	$1,918.49
Total Mobilization and Administrative Costs		**$80,576.58**

Grand Total (Preliminary Estimate)	**$272,425.58**

Preliminary Cost Estimate

Alternative F
Location: Silver Juniper Ranch Road, Lariat Lane, and Levie Lane
Description: TWLTL from Mendiburo Way to 300 ft south of Lariat Lane. Create frontage road opening at Lariat Lane. Close Silver Juniper Ranch and connect to west frontage road.

Roadway Item	Unit	Quantity	Unit Price	Amount
Pavement Removal	CU YD	150	$10.00	**$1,500.00**
Asphalt Concrete Pavement	SQ YD	2,500	$20.00	**$50,000.00**
Earthwork Cut	CU YD	0	$20.00	**$0.00**
Earthwork Fill	CU YD	44	$30.00	**$1,311.00**
Roadway Reconstruction (ISD)	CU YD	0	$40.00	**$0.00**
Tree Removal	EA	0	$500.00	**$0.00**
Culvert Headwall	EA	2	$5,000.00	**$10,000.00**
Culvert Extension	LF	50	$300.00	**$15,000.00**
Drainage Reconstruction	LS	N/A	N/A	**TBD**
Utility Relocation	LS	N/A	N/A	**TBD**
Guardrail Relocation	LF	325	$20.00	**$6,500.00**
Stripe Obliteration	LF	7,156	$2.00	**$14,312.00**
White Pavement Marking	LF	3,490	$0.10	**$349.00**
Yellow Pavement Marking	LF	6,420	$0.10	**$642.00**
Pavement Marking ARROW	EA	2	$100.00	**$200.00**
Pavement Marking ONLY	EA	1	$130.00	**$130.00**
Traffic Signal Equipment and Installation	EA	0	$210,000.00	**$0.00**
Single-Lane Roundabout	EA	0	$1,000,000.00	**$0.00**
Right-of-Way	LS	TBD	TBD	**TBD**
Subtotal				**$99,944.00**

		Mobilization, Design, and Administrative Costs
	Percentage of Subtotal	**Amount**
Mobilization	10%	$9,994.40
Traffic Control	5%	$4,997.20
Erosion Control	1%	$999.44
Construction Engineering	10%	$9,994.40
Construction Contingencies	5%	$4,997.20
Engineering Design	10%	$9,994.40
Post Design	1%	$999.44
Total Mobilization and Administrative Costs		**$41,976.48**

Grand Total (Preliminary Estimate)	**$141,920.48**

Preliminary Cost Estimate

Alternative G
Location: Rainmaker and Single Tree Street
Description: TWLTL from Love Lane to 300 feet south of Single Tree Street. Close Rainmaker and create new frontage opening at Single Tree Street. Extend NB right-turn lane at Single Tree Street.

Roadway Item	Unit	Quantity	Unit Price	Amount
Pavement Removal	CU YD	220	$10.00	**$2,200.00**
Asphalt Concrete Pavement	SQ YD	2,520	$20.00	**$50,400.00**
Earthwork Cut	CU YD	0	$20.00	**$0.00**
Earthwork Fill	CU YD	46	$30.00	**$1,386.00**
Roadway Reconstruction (ISD)	CU YD	0	$40.00	**$0.00**
Tree Removal	EA	0	$500.00	**$0.00**
Culvert Headwall	EA	2	$5,000.00	**$10,000.00**
Culvert Extension	LF	50	$300.00	**$15,000.00**
Drainage Reconstruction	LS	N/A	N/A	**TBD**
Utility Relocation	LS	N/A	N/A	**TBD**
Guardrail Relocation	LF	0	$20.00	**$0.00**
Stripe Obliteration	LF	7,480	$2.00	**$14,960.00**
White Pavement Marking	LF	3,705	$0.10	**$370.50**
Yellow Pavement Marking	LF	6,840	$0.10	**$684.00**
Pavement Marking ARROW	EA	2	$100.00	**$200.00**
Pavement Marking ONLY	EA	1	$130.00	**$130.00**
Traffic Signal Equipment and Installation	EA	0	$210,000.00	**$0.00**
Single-Lane Roundabout	EA	0	$1,000,000.00	**$0.00**
Right-of-Way	LS	N/A	N/A	**$0.00**
Subtotal				**$95,330.50**

		Mobilization, Design, and Administrative Costs
	Percentage of Subtotal	**Amount**
Mobilization	10%	$9,533.05
Traffic Control	5%	$4,766.53
Erosion Control	1%	$953.31
Construction Engineering	10%	$9,533.05
Construction Contingencies	5%	$4,766.53
Engineering Design	10%	$9,533.05
Post Design	1%	$953.31
Total Mobilization and Administrative Costs		**$40,038.81**

Grand Total (Preliminary Estimate)	**$135,369.31**

Preliminary Cost Estimate

Alternative H
Location: Granite Park Drive
Description: Reconstruct Williamson Valley Road north of Granite Park Drive for approximately 400 feet to improve sight distance related to vertical curvature.

Roadway Item	Unit	Quantity	Unit Price	Amount
Pavement Removal	CU YD	0	$10.00	**$0.00**
Asphalt Concrete Pavement	SQ YD	1,387	$20.00	**$27,733.33**
Earthwork Cut	CU YD	0	$20.00	**$0.00**
Earthwork Fill	CU YD	0	$30.00	**$0.00**
Roadway Reconstruction (ISD)	CU YD	1,740	$40.00	**$69,600.00**
Tree Removal	EA	0	$500.00	**$0.00**
Culvert Headwall	EA	0	$5,000.00	**$0.00**
Culvert Extension	LF	0	$300.00	**$0.00**
Drainage Reconstruction	LS	N/A	N/A	**TBD**
Utility Relocation	LS	N/A	N/A	**TBD**
Guardrail Relocation	LF	0	$20.00	**$0.00**
Stripe Obliteration	LF	0	$2.00	**$0.00**
White Pavement Marking	LF	1,620	$0.10	**$162.00**
Yellow Pavement Marking	LF	1,620	$0.10	**$162.00**
Pavement Marking ARROW	EA	0	$100.00	**$0.00**
Pavement Marking ONLY	EA	0	$130.00	**$0.00**
Traffic Signal Equipment and Installation	EA	0	$210,000.00	**$0.00**
Single-Lane Roundabout	EA	0	$1,000,000.00	**$0.00**
Right-of-Way	LS		N/A	**$0.00**
Subtotal				**$97,657.33**

		Mobilization, Design, and Administrative Costs
	Percentage of Subtotal	**Amount**
Mobilization	10%	$9,765.73
Traffic Control	5%	$4,882.87
Erosion Control	1%	$976.57
Construction Engineering	10%	$9,765.73
Construction Contingencies	5%	$4,882.87
Engineering Design	10%	$9,765.73
Post Design	1%	$976.57
Total Mobilization and Administrative Costs		**$41,016.08**

Grand Total (Preliminary Estimate)	**$138,673.41**

Preliminary Cost Estimate

Alternative I
Location: Glenshandra Drive
Description: Extend NB right-turn lane

Roadway Item	Unit	Quantity	Unit Price	Amount
Pavement Removal	CU YD	0	$10.00	**$0.00**
Asphalt Concrete Pavement	SQ YD	130	$20.00	**$2,600.00**
Earthwork Cut	CU YD	0	$20.00	**$0.00**
Earthwork Fill	CU YD	0	$30.00	**$0.00**
Roadway Reconstruction (ISD)	CU YD	0	$40.00	**$0.00**
Tree Removal	EA	0	$500.00	**$0.00**
Culvert Headwall	EA	0	$5,000.00	**$0.00**
Culvert Extension	LF	0	$300.00	**$0.00**
Drainage Reconstruction	LS	N/A	N/A	**TBD**
Utility Relocation	LS	N/A	N/A	**TBD**
Guardrail Relocation	LF	0	$20.00	**$0.00**
Stripe Obliteration	LF	1,500	$2.00	**$3,000.00**
White Pavement Marking	LF	550	$0.10	**$55.00**
Yellow Pavement Marking	LF	345	$0.10	**$34.50**
Pavement Marking ARROW	EA	2	$100.00	**$200.00**
Pavement Marking ONLY	EA	1	$130.00	**$130.00**
Traffic Signal Equipment and Installation	EA	0	$210,000.00	**$0.00**
Single-Lane Roundabout	EA	0	$1,000,000.00	**$0.00**
Right-of-Way	LS	N/A	N/A	**$0.00**
Subtotal				**$6,019.50**

		Mobilization, Design, and Administrative Costs
	Percentage of Subtotal	**Amount**
Mobilization	10%	$601.95
Traffic Control	5%	$300.98
Erosion Control	1%	$60.20
Construction Engineering	10%	$601.95
Construction Contingencies	5%	$300.98
Engineering Design	10%	$601.95
Post Design	1%	$60.20
Total Mobilization and Administrative Costs		**$2,528.19**

Grand Total (Preliminary Estimate)	**$8,547.69**

Preliminary Cost Estimate

Alternative J
Location: Granite Oaks Drive/Trailhead
Description: TWLTL from 300 feet north and 300 feet south of intersection

Roadway Item	Unit	Quantity	Unit Price	Amount
Pavement Removal	CU YD	0	$10.00	**$0.00**
Asphalt Concrete Pavement	SQ YD	1,250	$20.00	**$25,000.00**
Earthwork Cut	CU YD	0	$20.00	**$0.00**
Earthwork Fill	CU YD	0	$30.00	**$0.00**
Roadway Reconstruction (ISD)	CU YD	0	$40.00	**$0.00**
Tree Removal	EA	0	$500.00	**$0.00**
Culvert Headwall	EA	0	$5,000.00	**$0.00**
Culvert Extension	LF	0	$300.00	**$0.00**
Drainage Reconstruction	LS	N/A	N/A	**TBD**
Utility Relocation	LS	N/A	N/A	**TBD**
Guardrail Relocation	LF	0	$20.00	**$0.00**
Stripe Obliteration	LF	5,840	$2.00	**$11,680.00**
White Pavement Marking	LF	3,050	$0.10	**$305.00**
Yellow Pavement Marking	LF	2,640	$0.10	**$264.00**
Pavement Marking ARROW	EA	4	$100.00	**$400.00**
Pavement Marking ONLY	EA	2	$130.00	**$260.00**
Traffic Signal Equipment and Installation	EA	0	$210,000.00	**$0.00**
Single-Lane Roundabout	EA	0	$1,000,000.00	**$0.00**
Right-of-Way	LS	N/A	N/A	**$0.00**
Subtotal				**$37,909.00**

Mobilization, Design, and Administrative Costs		
	Percentage of Subtotal	**Amount**
Mobilization	10%	$3,790.90
Traffic Control	5%	$1,895.45
Erosion Control	1%	$379.09
Construction Engineering	10%	$3,790.90
Construction Contingencies	5%	$1,895.45
Engineering Design	10%	$3,790.90
Post Design	1%	$379.09
Total Mobilization and Administrative Costs		**$15,921.78**

Grand Total (Preliminary Estimate)	**$53,830.78**

Preliminary Cost Estimate

Alternative K
Location: Bard Ranch Road
Description: Add SB left-turn lane, extend NB right-turn lane

Roadway Item	Unit	Quantity	Unit Price	Amount
Pavement Removal	CU YD	0	$10.00	**$0.00**
Asphalt Concrete Pavement	SQ YD	1,180	$20.00	**$23,600.00**
Earthwork Cut	CU YD	0	$20.00	**$0.00**
Earthwork Fill	CU YD	0	$30.00	**$0.00**
Roadway Reconstruction (ISD)	CU YD	0	$40.00	**$0.00**
Tree Removal	EA	0	$500.00	**$0.00**
Culvert Headwall	EA	0	$5,000.00	**$0.00**
Culvert Extension	LF	0	$300.00	**$0.00**
Drainage Reconstruction	LS	N/A	N/A	**TBD**
Utility Relocation	LS	N/A	N/A	**TBD**
Guardrail Relocation	LF	0	$20.00	**$0.00**
Stripe Obliteration	LF	5,660	$2.00	**$11,320.00**
White Pavement Marking	LF	2,540	$0.10	**$254.00**
Yellow Pavement Marking	LF	3,570	$0.10	**$357.00**
Pavement Marking ARROW	EA	4	$100.00	**$400.00**
Pavement Marking ONLY	EA	2	$130.00	**$260.00**
Traffic Signal Equipment and Installation	EA	0	$210,000.00	**$0.00**
Single-Lane Roundabout	EA	0	$1,000,000.00	**$0.00**
Right-of-Way	LS	N/A	N/A	**$0.00**
Subtotal				**$36,191.00**

		Mobilization, Design, and Administrative Costs
	Percentage of Subtotal	**Amount**
Mobilization	10%	$3,619.10
Traffic Control	5%	$1,809.55
Erosion Control	1%	$361.91
Construction Engineering	10%	$3,619.10
Construction Contingencies	5%	$1,809.55
Engineering Design	10%	$3,619.10
Post Design	1%	$361.91
Total Mobilization and Administrative Costs		**$15,200.22**

Grand Total (Preliminary Estimate)	**$51,391.22**

Preliminary Cost Estimate

Alternative L
Location: Buchanan Drive
Description: Add NB left-turn lane

Roadway Item	Unit	Quantity	Unit Price	Amount
Pavement Removal	CU YD	0	$10.00	**$0.00**
Asphalt Concrete Pavement	SQ YD	1,070	$20.00	**$21,400.00**
Earthwork Cut	CU YD	0	$20.00	**$0.00**
Earthwork Fill	CU YD	0	$30.00	**$0.00**
Roadway Reconstruction (ISD)	CU YD	0	$40.00	**$0.00**
Tree Removal	EA	0	$500.00	**$0.00**
Culvert Headwall	EA	0	$5,000.00	**$0.00**
Culvert Extension	LF	0	$300.00	**$0.00**
Drainage Reconstruction	LS	N/A	N/A	**TBD**
Utility Relocation	LS	N/A	N/A	**TBD**
Guardrail Relocation	LF	0	$20.00	**$0.00**
Stripe Obliteration	LF	4,260	$2.00	**$8,520.00**
White Pavement Marking	LF	2,335	$0.10	**$233.50**
Yellow Pavement Marking	LF	3,570	$0.10	**$357.00**
Pavement Marking ARROW	EA	2	$100.00	**$200.00**
Pavement Marking ONLY	EA	1	$130.00	**$130.00**
Traffic Signal Equipment and Installation	EA	0	$210,000.00	**$0.00**
Single-Lane Roundabout	EA	0	$1,000,000.00	**$0.00**
Right-of-Way	LS	N/A	N/A	**$0.00**
Subtotal				**$30,840.50**

Mobilization, Design, and Administrative Costs		
	Percentage of Subtotal	**Amount**
Mobilization	10%	$3,084.05
Traffic Control	5%	$1,542.03
Erosion Control	1%	$308.41
Construction Engineering	10%	$3,084.05
Construction Contingencies	5%	$1,542.03
Engineering Design	10%	$3,084.05
Post Design	1%	$308.41
Total Mobilization and Administrative Costs		**$12,953.01**

Grand Total (Preliminary Estimate)	**$43,793.51**

Preliminary Cost Estimate

Alternative M
Location: Blackjack Ridge Road
Description: Add SB left-turn lane and NB right-turn lane

Roadway Item	Unit	Quantity	Unit Price	Amount
Pavement Removal	CU YD	0	$10.00	**$0.00**
Asphalt Concrete Pavement	SQ YD	1,630	$20.00	**$32,600.00**
Earthwork Cut	CU YD	0	$20.00	**$0.00**
Earthwork Fill	CU YD	0	$30.00	**$0.00**
Roadway Reconstruction (ISD)	CU YD	0	$40.00	**$0.00**
Tree Removal	EA	0	$500.00	**$0.00**
Culvert Headwall	EA	0	$5,000.00	**$0.00**
Culvert Extension	LF	0	$300.00	**$0.00**
Drainage Reconstruction	LS	N/A	N/A	**TBD**
Utility Relocation	LS	N/A	N/A	**TBD**
Guardrail Relocation	LF	0	$20.00	**$0.00**
Stripe Obliteration	LF	4,260	$2.00	**$8,520.00**
White Pavement Marking	LF	2,540	$0.10	**$254.00**
Yellow Pavement Marking	LF	3,570	$0.10	**$357.00**
Pavement Marking ARROW	EA	4	$100.00	**$400.00**
Pavement Marking ONLY	EA	2	$130.00	**$260.00**
Traffic Signal Equipment and Installation	EA	0	$210,000.00	**$0.00**
Single-Lane Roundabout	EA	0	$1,000,000.00	**$0.00**
Right-of-Way	LS	N/A	N/A	**$0.00**
Subtotal				**$42,391.00**

		Mobilization, Design, and Administrative Costs
	Percentage of Subtotal	**Amount**
Mobilization	10%	$4,239.10
Traffic Control	5%	$2,119.55
Erosion Control	1%	$423.91
Construction Engineering	10%	$4,239.10
Construction Contingencies	5%	$2,119.55
Engineering Design	10%	$4,239.10
Post Design	1%	$423.91
Total Mobilization and Administrative Costs		**$17,804.22**

Grand Total (Preliminary Estimate)	**$60,195.22**

Preliminary Cost Estimate

Alternative N
Location: American Ranch Road
Description: Extend NB left-turn lane

Roadway Item	Unit	Quantity	Unit Price	Amount
Pavement Removal	CU YD	0	$10.00	**$0.00**
Asphalt Concrete Pavement	SQ YD	410	$20.00	**$8,200.00**
Earthwork Cut	CU YD	0	$20.00	**$0.00**
Earthwork Fill	CU YD	0	$30.00	**$0.00**
Roadway Reconstruction (ISD)	CU YD	0	$40.00	**$0.00**
Tree Removal	EA	0	$500.00	**$0.00**
Culvert Headwall	EA	0	$5,000.00	**$0.00**
Culvert Extension	LF	0	$300.00	**$0.00**
Drainage Reconstruction	LS	N/A	N/A	**TBD**
Utility Relocation	LS	N/A	N/A	**TBD**
Guardrail Relocation	LF	0	$20.00	**$0.00**
Stripe Obliteration	LF	3,125	$2.00	**$6,250.00**
White Pavement Marking	LF	1,820	$0.10	**$182.00**
Yellow Pavement Marking	LF	2,130	$0.10	**$213.00**
Pavement Marking ARROW	EA	4	$100.00	**$400.00**
Pavement Marking ONLY	EA	2	$130.00	**$260.00**
Traffic Signal Equipment and Installation	EA	0	$210,000.00	**$0.00**
Single-Lane Roundabout	EA	0	$1,000,000.00	**$0.00**
Right-of-Way	LS	N/A	N/A	**$0.00**
Subtotal				**$15,505.00**

		Mobilization, Design, and Administrative Costs
	Percentage of Subtotal	**Amount**
Mobilization	10%	$1,550.50
Traffic Control	5%	$775.25
Erosion Control	1%	$155.05
Construction Engineering	10%	$1,550.50
Construction Contingencies	5%	$775.25
Engineering Design	10%	$1,550.50
Post Design	1%	$155.05
Total Mobilization and Administrative Costs		**$6,512.10**

Grand Total (Preliminary Estimate)	**$22,017.10**

Preliminary Cost Estimate

Alternative O
Location: Outer Loop Road / Old Stage Road
Description: Add NB and SB left-turn lanes, convert NB right-turn lane to offset-right turn. (No Signal)

Roadway Item	Unit	Quantity	Unit Price	Amount
Pavement Removal	CU YD	0	$10.00	**$0.00**
Asphalt Concrete Pavement	SQ YD	1,840	$20.00	**$36,800.00**
Earthwork Cut	CU YD	0	$20.00	**$0.00**
Earthwork Fill	CU YD	0	$30.00	**$0.00**
Roadway Reconstruction (ISD)	CU YD	0	$40.00	**$0.00**
Tree Removal	EA	0	$500.00	**$0.00**
Culvert Headwall	EA	0	$5,000.00	**$0.00**
Culvert Extension	LF	0	$300.00	**$0.00**
Drainage Reconstruction	LS	N/A	N/A	**TBD**
Utility Relocation	LS	N/A	N/A	**TBD**
Guardrail Relocation	LF	0	$20.00	**$0.00**
Stripe Obliteration	LF	6,240	$2.00	**$12,480.00**
White Pavement Marking	LF	4,185	$0.10	**$418.50**
Yellow Pavement Marking	LF	4,460	$0.10	**$446.00**
Pavement Marking ARROW	EA	8	$100.00	**$800.00**
Pavement Marking ONLY	EA	3	$130.00	**$390.00**
Traffic Signal Equipment and Installation	EA	0	$210,000.00	**$0.00**
Single-Lane Roundabout	EA	0	$1,000,000.00	**$0.00**
Right-of-Way	LS	N/A	N/A	**$0.00**
Subtotal				**$51,334.50**

Mobilization, Design, and Administrative Costs		
	Percentage of Subtotal	**Amount**
Mobilization	10%	$5,133.45
Traffic Control	5%	$2,566.73
Erosion Control	1%	$513.35
Construction Engineering	10%	$5,133.45
Construction Contingencies	5%	$2,566.73
Engineering Design	10%	$5,133.45
Post Design	1%	$513.35
Total Mobilization and Administrative Costs		**$21,560.49**

Grand Total (Preliminary Estimate)	**$72,894.99**

Preliminary Cost Estimate

Alternative P
Location: Outer Loop Road / Old Stage Road
Description: Traffic signal with NB and SB left-turn lanes

Roadway Item	Unit	Quantity	Unit Price	Amount
Pavement Removal	CU YD	0	$10.00	**$0.00**
Asphalt Concrete Pavement	SQ YD	2,010	$20.00	**$40,200.00**
Earthwork Cut	CU YD	0	$20.00	**$0.00**
Earthwork Fill	CU YD	0	$30.00	**$0.00**
Roadway Reconstruction (ISD)	CU YD	0	$40.00	**$0.00**
Tree Removal	EA	0	$500.00	**$0.00**
Culvert Headwall	EA	0	$5,000.00	**$0.00**
Culvert Extension	LF	0	$300.00	**$0.00**
Drainage Reconstruction	LS	N/A	N/A	**TBD**
Utility Relocation	LS	N/A	N/A	**TBD**
Guardrail Relocation	LF	0	$20.00	**$0.00**
Stripe Obliteration	LF	6,240	$2.00	**$12,480.00**
White Pavement Marking	LF	4,785	$0.10	**$478.50**
Yellow Pavement Marking	LF	4,760	$0.10	**$476.00**
Pavement Marking ARROW	EA	8	$100.00	**$800.00**
Pavement Marking ONLY	EA	3	$130.00	**$390.00**
Traffic Signal Equipment and Installation	EA	1	$210,000.00	**$210,000.00**
Single-Lane Roundabout	EA	0	$1,000,000.00	**$0.00**
Right-of-Way	LS	TBD	TBD	**TBD**
Subtotal				**$264,824.50**

		Mobilization, Design, and Administrative Costs
	Percentage of Subtotal	**Amount**
Mobilization	10%	$26,482.45
Traffic Control	5%	$13,241.23
Erosion Control	1%	$2,648.25
Construction Engineering	10%	$26,482.45
Construction Contingencies	5%	$13,241.23
Engineering Design	10%	$26,482.45
Post Design	1%	$2,648.25
Total Mobilization and Administrative Costs		**$111,226.29**

Grand Total (Preliminary Estimate)	**$376,050.79**

Preliminary Cost Estimate

Alternative Q
Location: Outer Loop Road / Old Stage Road
Description: Modern Roundabout

Roadway Item	Unit	Quantity	Unit Price	Amount
Pavement Removal	CU YD	0	$10.00	**$0.00**
Asphalt Concrete Pavement	SQ YD	5,852	$20.00	**$117,044.44**
Earthwork Cut	CU YD	0	$20.00	**$0.00**
Earthwork Fill	CU YD	0	$30.00	**$0.00**
Roadway Reconstruction (ISD)	CU YD	0	$40.00	**$0.00**
Tree Removal	EA	0	$500.00	**$0.00**
Culvert Headwall	EA	0	$5,000.00	**$0.00**
Culvert Extension	LF	0	$300.00	**$0.00**
Drainage Reconstruction	LS	N/A	N/A	**TBD**
Utility Relocation	LS	N/A	N/A	**TBD**
Guardrail Relocation	LF	0	$20.00	**$0.00**
Stripe Obliteration	LF	8,460	$2.00	**$16,920.00**
White Pavement Marking	LF	5,760	$0.10	**$576.00**
Yellow Pavement Marking	LF	6,300	$0.10	**$630.00**
Pavement Marking ARROW	EA	0	$100.00	**$0.00**
Pavement Marking ONLY	EA	0	$130.00	**$0.00**
Traffic Signal Equipment and Installation	EA	0	$210,000.00	**$0.00**
Single-Lane Roundabout	EA	1	$1,000,000.00	**$1,000,000.00**
Right-of-Way	LS	TBD	TBD	**TBD**
Subtotal				**$1,135,170.44**

Mobilization, Design, and Administrative Costs		
	Percentage of Subtotal	**Amount**
Mobilization	10%	$113,517.04
Traffic Control	5%	$56,758.52
Erosion Control	1%	$11,351.70
Construction Engineering	10%	$113,517.04
Construction Contingencies	5%	$56,758.52
Engineering Design	10%	$113,517.04
Post Design	1%	$11,351.70
Total Mobilization and Administrative Costs		**$476,771.59**

Grand Total (Preliminary Estimate)	**$1,611,942.03**

Preliminary Cost Estimate

Alternative R
Location: Sharps Road
Description: Add NB left-turn lane

Roadway Item	Unit	Quantity	Unit Price	Amount
Pavement Removal	CU YD	0	$10.00	**$0.00**
Asphalt Concrete Pavement	SQ YD	1,050	$20.00	**$21,000.00**
Earthwork Cut	CU YD	0	$20.00	**$0.00**
Earthwork Fill	CU YD	0	$30.00	**$0.00**
Roadway Reconstruction (ISD)	CU YD	0	$40.00	**$0.00**
Tree Removal	EA	0	$500.00	**$0.00**
Culvert Headwall	EA	0	$5,000.00	**$0.00**
Culvert Extension	LF	0	$300.00	**$0.00**
Drainage Reconstruction	LS	N/A	N/A	**TBD**
Utility Relocation	LS	N/A	N/A	**TBD**
Guardrail Relocation	LF	0	$20.00	**$0.00**
Stripe Obliteration	LF	4,260	$2.00	**$8,520.00**
White Pavement Marking	LF	2,335	$0.10	**$233.50**
Yellow Pavement Marking	LF	3,570	$0.10	**$357.00**
Pavement Marking ARROW	EA	2	$100.00	**$200.00**
Pavement Marking ONLY	EA	1	$130.00	**$130.00**
Traffic Signal Equipment and Installation	EA	0	$210,000.00	**$0.00**
Single-Lane Roundabout	EA	0	$1,000,000.00	**$0.00**
Right-of-Way	LS	N/A	N/A	**$0.00**
Subtotal				**$30,440.50**

		Mobilization, Design, and Administrative Costs
	Percentage of Subtotal	**Amount**
Mobilization	10%	$3,044.05
Traffic Control	5%	$1,522.03
Erosion Control	1%	$304.41
Construction Engineering	10%	$3,044.05
Construction Contingencies	5%	$1,522.03
Engineering Design	10%	$3,044.05
Post Design	1%	$304.41
Total Mobilization and Administrative Costs		**$12,785.01**

Grand Total (Preliminary Estimate)	**$43,225.51**

Preliminary Cost Estimate

Alternative S
Location: Stazenski Road/Williamson Valley Ranch Road
Description: Add NB and SB left-turn lanes, extend NB right-turn lane

Roadway Item	Unit	Quantity	Unit Price	Amount
Pavement Removal	CU YD	0	$10.00	**$0.00**
Asphalt Concrete Pavement	SQ YD	1,290	$20.00	**$25,800.00**
Earthwork Cut	CU YD	0	$20.00	**$0.00**
Earthwork Fill	CU YD	0	$30.00	**$0.00**
Roadway Reconstruction (ISD)	CU YD	0	$40.00	**$0.00**
Tree Removal	EA	0	$500.00	**$0.00**
Culvert Headwall	EA	0	$5,000.00	**$0.00**
Culvert Extension	LF	0	$300.00	**$0.00**
Drainage Reconstruction	LS	N/A	N/A	**TBD**
Utility Relocation	LS	N/A	N/A	**TBD**
Guardrail Relocation	LF	0	$20.00	**$0.00**
Stripe Obliteration	LF	8,545	$2.00	**$17,090.00**
White Pavement Marking	LF	3,435	$0.10	**$343.50**
Yellow Pavement Marking	LF	4,260	$0.10	**$426.00**
Pavement Marking ARROW	EA	6	$100.00	**$600.00**
Pavement Marking ONLY	EA	3	$130.00	**$390.00**
Traffic Signal Equipment and Installation	EA	0	$210,000.00	**$0.00**
Single-Lane Roundabout	EA	0	$1,000,000.00	**$0.00**
Right-of-Way	LS	N/A	N/A	**$0.00**
Subtotal				**$44,649.50**

Mobilization, Design, and Administrative Costs		
	Percentage of Subtotal	**Amount**
Mobilization	10%	$4,464.95
Traffic Control	5%	$2,232.48
Erosion Control	1%	$446.50
Construction Engineering	10%	$4,464.95
Construction Contingencies	5%	$2,232.48
Engineering Design	10%	$4,464.95
Post Design	1%	$446.50
Total Mobilization and Administrative Costs		**$18,752.79**

Grand Total (Preliminary Estimate)	**$63,402.29**

Preliminary Cost Estimate

Alternative T
Location: Cielo Grande and Dome Road
Description: Add NB left-turn lane. Reconstruct roadway south of intersection to improve sight distance related to vertical curvature. Cut back embankment on the east side of Williamson Valley Road, south of Dome Road.

Roadway Item	Unit	Quantity	Unit Price	Amount
Pavement Removal	CU YD	0	$10.00	**$0.00**
Asphalt Concrete Pavement	SQ YD	1,240	$20.00	**$24,800.00**
Earthwork Cut	CU YD	260	$20.00	**$5,200.00**
Earthwork Fill	CU YD	0	$30.00	**$0.00**
Roadway Reconstruction (ISD)	CU YD	2,410	$40.00	**$96,400.00**
Tree Removal	EA	0	$500.00	**$0.00**
Culvert Headwall	EA	0	$5,000.00	**$0.00**
Culvert Extension	LF	0	$300.00	**$0.00**
Drainage Reconstruction	LS	N/A	N/A	**TBD**
Utility Relocation	LS	N/A	N/A	**TBD**
Guardrail Relocation	LF	0	$20.00	**$0.00**
Stripe Obliteration	LF	4,260	$2.00	**$8,520.00**
White Pavement Marking	LF	2,335	$0.10	**$233.50**
Yellow Pavement Marking	LF	3,570	$0.10	**$357.00**
Pavement Marking ARROW	EA	2	$100.00	**$200.00**
Pavement Marking ONLY	EA	1	$130.00	**$130.00**
Traffic Signal Equipment and Installation	EA	0	$210,000.00	**$0.00**
Single-Lane Roundabout	EA	0	$1,000,000.00	**$0.00**
Right-of-Way	LS	N/A	N/A	**$0.00**
Subtotal				**$135,840.50**

		Mobilization, Design, and Administrative Costs
	Percentage of Subtotal	**Amount**
Mobilization	10%	$13,584.05
Traffic Control	5%	$6,792.03
Erosion Control	1%	$1,358.41
Construction Engineering	10%	$13,584.05
Construction Contingencies	5%	$6,792.03
Engineering Design	10%	$13,584.05
Post Design	1%	$1,358.41
Total Mobilization and Administrative Costs		**$57,053.01**

Grand Total (Preliminary Estimate)	**$192,893.51**